NASA SP-6101 (11)

ISSUES IN NASA PROGRAM AND PROJECT MANAGEMENT

A Collection of Papers on Aerospace Management Issues

NASA SP-6101 (11)

ISSUES IN NASA PROGRAM AND PROJECT MANAGEMENT

A Collection of Papers on Aerospace Management Issues

edited by

Edward J. Hoffman
Program Manager
NASA Program and Project Management Initiative

William M. Lawbaugh
Technical and Administrative Services Corporation (TADCORPS)

National Aeronautics and Space Administration
Office of Management Systems and Facilities
Scientific and Technical Information Program
Washington, DC 1996

NASA's Project Management Development Process

by Dr. Edward J. Hoffman

Professional development has always been a major concern at NASA, but until recently there has been no systematic process for the development, growth and improvement of the Agency's people working on projects.

Ten years ago NASA established the Program Project Management Initiative (PPMI) to provide project management development in advance of need. Over the years, PPMI has met the needs of thousands of NASA employees. In recent years greater emphasis has been placed on having a more systematic, Agencywide process for the development of people in projects.

In order to establish a systematic process which would best represent NASA and meet the demands of our workforce, a study was conducted to determine the components of an effective development process. The researchers interviewed over 150 people from five NASA Centers at various stages of their careers. The central finding of this study was the need for a NASA project management development process that would be voluntary, nonbureacratic, open to many, and involve a minimum of paperwork.

In August of 1993 the results of the full-scale Career Development Research Study were published. The study, titled *Career Development for Project Management*, was designed to create an empirically based foundation for the Project Management Development Process (PMDP). A shortened version of this document was published in the Winter 1994 edition of *Issues in NASA Program and Project Management*, NASA SP-6101(08).

Out of this significant study came the four-level professional development chart (Figure 1) for people in projects, which has been widely reprinted. More directly, this study led to NASA senior management's recommendation to establish and institutionalize the Project Management Development Process. The PMDP, formally established in 1995, has received a great deal of interest from other government agencies and industry, as well as international organizations.

While communicating the PMDP and receiving ideas for implementation, General Spence "Sam" Armstrong, Associate Administrator for Human Resources and Education, and I visited each and every NASA Center. What we found was a great depth of concern for fairness and equity in the development of program and project managers. Loud and clear, the predominant concerns were that NASA management would openly support and communicate such a process for NASA employees, and that the PMDP not result in a system which forced Center managers to hire project managers who have only gained "checklist" qualification. It should be neither a barrier nor a guarantee of promotion, but rather a wide-open, professional enhancement opportunity.

In January of 1995 a group of NASA project managers and human resources management professionals met with PPMI staff at Kennedy Space Center to plan the launch of PMDP. This group refined and expanded the developmental experience and training recommendations described within the two PMDP handbooks. (Both the participant and supervisors PMDP handbooks are available through local training offices, as well as through the NASA PPMI web site: http://www.hq.nasa.gov/office/HR-Education/training/ppmi.htm.) The group also refined the PMDP structure found in Figure 1, showing the preparation and four levels of accomplishment, plus the reviews needed for advancement to ongoing professional development.

Note that PMDP is a process, not a program or product, and it is open to senior managers as well as to new hires and mid-career NASA employees. The development process is ongoing. It is also important

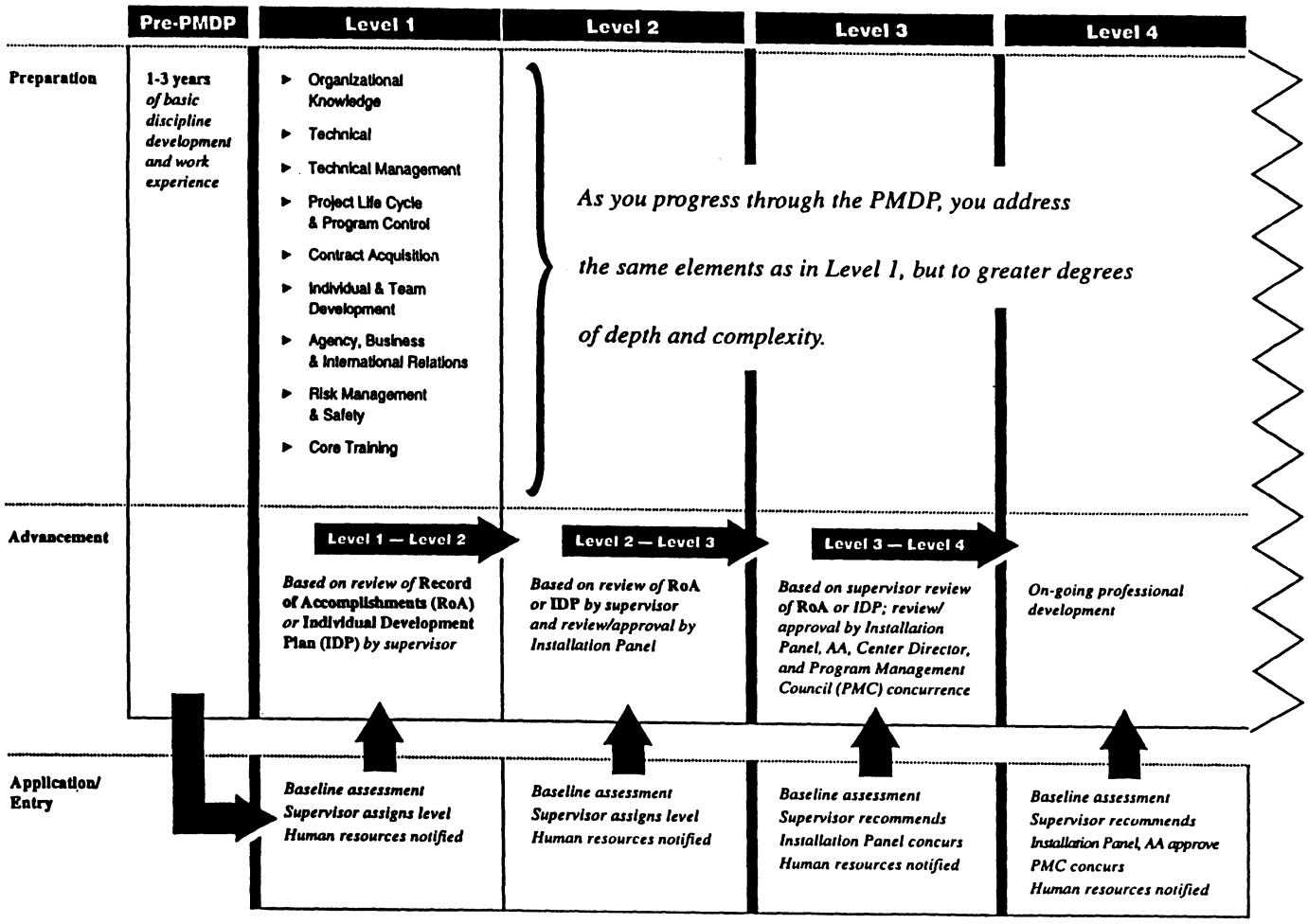

Figure 1. PMDP Levels of Accomplishment.

to keep in mind that PMDP is not a training process; rather, it is a development process for enhancing critical competencies associated with the work of people in projects. With this direction, PMDP encourages gaining competency through appropriate and specific work assignments which are supplemented by well-timed training and development rotations and assignments.

The Project Management Development Process became official on August 22, 1995, when General John R. Dailey, Acting Deputy Administrator, notified officials at headquarters and directors of field installations. In part he wrote:

"During this time of dramatic change at NASA, it is critical to reemphasize the importance of our career development programs for our employees. We must maintain our commitment to the future by supporting the ongoing learning and necessary work and training experiences of the NASA workforce. It is the responsibility of each Installation to support members of the project management community in receiving the proper experiences during their career.

"Over the past two years, we have instituted many efforts within NASA to codify a more consistent approach for managing our projects. As part of these efforts, the Program Management Council has been established to review major programs, and NMI 7120.4 (Management of Major System Programs and Projects) has been enhanced to better reflect the criteria for the effective management of our major programs and projects.

"To successfully implement these changes, we must communicate and institutionalize these project management standards to make them a natural component of how we do our work. A key vehicle for assisting this integration is the PMDP. The PMDP is an Agencywide professional development process for employees interested in project management. It will assist employees with identifying work and training experiences beneficial to their professional development. In addition, it will also support a more consistent application of successful project management practices across NASA. There are significant benefits for both NASA and our employees."

Shortly after General Dailey's announcement, materials describing the process and startup procedures were sent to the training and development office and to senior management at each NASA installation. Included were a 14-minute videotape, guidebooks for both participants and their mentor or supervisor and an Individual Development Plan (IDP) advisory, listing potential ways to gain specific skills and experiences.

PMDP Guidelines

To support the PMDP, a participant handbook and a supervisor handbook were created. Both guidebooks begin with a description of the Project Management Development Process, including the three main goals of strengthening "the consistent application of successful project management practices" across all of NASA, providing "clear information" about professional development opportunities in the Agency, and identifying "work experiences, training and developmental assignments" which enable people in projects to enhance their competencies and support career development goals. The PMDP is not a selection process that limits future selection, nor is it a guarantee of future promotion. It is intended to support the enhancement of professional capabilities and growth, not to preselect future managers or limit promotion opportunities to a select few.

PMDP is a "tool" to assist the NASA employee in development planning. Its starting point and framework is the employee's Individual Development Plan, a projection of the applicant's career objectives along with the on-the-job work requirements to be supplemented by training and work assignments. The IDP is worked out in conjunction with a supervisor and, if desired, a mentor who will guide the employee through the PMDP. An IDP can be a Center-specific process, the NASA process or an approach the individual and immediate supervisor support.

The mentor and/or supervisor will ordinarily begin the process by asking the applicant to fill out a Record of Accomplishment (RoA), which will help each of them to determine where the employee is in terms of professional development. The RoA is a simple form, not unlike a resume or curriculum vitae, listing relevant education, work experience, training courses and other accomplished development opportunities. There is a sample RoA page within the participant handbook. It is the development of this RoA or listing of work and educational experiences that provides the individual and the supervisor with the information necessary to discuss an appropriate initial level of entry into the PMDP. More important than the initial level, however, is the fact that the RoA forces a person to take the time to document specifically the past experiences which establish a skill mark and visually supports the person in planning for future goals.

During the initial planning process the supervisor should provide honest feedback about the employee's accomplishments, skills and areas of growth. In addition, a mentor may be extremely useful for providing guidance of expertise which the supervisor might not have. It is important to keep in mind that the intent of this process is not to ascend to the highest level possible; the objective is to document the experiences gained to date honestly and clarify individual competencies, areas for growth and specific steps for enhancing competency. The PMDP should open up a window of needs and concurrent opportunities for gaining competencies.

Both the RoA and the IDP are simply professional development tools. Completion of the forms is not an end in itself nor a contract for advancement. Emphasis should always be on the development process, not merely filling out forms and getting

them signed. (In fact, the intent is that after the initial establishment of an RoA and a IDP, documentation and maintenance become simple.)

To assist the employee in building the Individual Development Plan, the PPMI has created the *IDP Advisor*, a 34-page handbook with locator that provides specific examples of potential work experiences and training recommendations for each of the four levels. The *IDP Advisor* is intended as a catalyst of potential activities, not a prescription. It will also be periodically updated to reflect management changes and offer new ideas.

Management Development Process

At the heart of PMDP are the core competencies for each of the four levels. Within each level are knowledge, skills and competencies clustered within the following eight general factors:

- organizational knowledge
- technical knowledge
- technical management
- project life cycle and program control
- contract acquisition
- individual and team development
- Agency, business and international relations
- risk management and safety

As can be seen in the four-level competencies chart, hands-on technical expertise is emphasized in Level One, while broad leadership competencies are emphasized increasingly up through Level Four.

Typically, Level One is considered entry level after one to three years of basic discipline development and work experience. It focuses on hands-on engineering tasks. One critical component is understanding NASA guidance on the management of projects as documented in the soon to be released NPD 7120.4 (and concurrent handbook). Also considered critical to job performance in terms of organizational knowledge is some kind of understanding of and experience with the NASA Project Life Cycle. The supervisor and/or mentor may specify the observation of at least one program review per phase locally, plus several observations of project life cycle reviews with the Center director or directorate.

In the technical area, hands-on hardware/software operations are deemed critical, along with configuration management systems and procedures, plus quality assurance. Over a period of three or four years, the entry-level candidate is expected to develop thorough technical knowledge in his or her discipline, and participate in both operations analysis and research activities.

Three core training experiences are required for Level One candidates, each related to a corresponding work requirement. The Program Control Overview course relates to Project Life Cycle development activities, while Systems Engineering and Task Management enrich the technical program flow as well as cost and scheduling work requirements. (Be aware that the Task Management course is called by other titles at local Center offerings, typically Project Leadership Simulation.) Several other PPMI courses are encouraged, depending upon the candidate's work schedule and experiences. The fundamental idea is to make theory and practice mutually beneficial. As the one informs the other, the candidate in Level One obtains a broad foundation of knowledge and experience necessary for systematic career development.

Level Two candidates, on the other hand, typically find themselves gaining valuable experience as a technical expert or as a leader on small subsystems or instrumentation projects. Their required courses are Project Management and Program Control Overview. At this point the candidate should be designing, developing, testing and reviewing hardware/software at the test bed and system level. He or she may serve as the leader of a matrixed team, and lead team meetings.

Their knowledge of issues in interagency and international relations can be enhanced through work assignments, task teams and possible rotations. The candidates should by now be writing reports, requirements and Statements of Work (SOWs) for a subsystem. At this level they are encouraged to enhance their managerial skills because they will be assuming more managerial duties, with their communication and interpersonal skills becoming more important.

Level Three reflects a systems manager perspective. A candidate is expected to manage a systems-level project, including contractors and NASA team members. The individual manager is usually responsible for contract management, developing and monitoring master schedules, maintaining budget control, preparing a Program Operating Plan (POP) and managing the overall system life cycle. The project manager at this level is seen as an Agency resource and may be asked to serve NASA-wide boards.

The Advanced Project Management course must be completed before completing Level Three. Courses in management and Performance Measurement Systems are encouraged, along with the Project Management Shared Experiences Program offered every other year.

The PMSEP is also encouraged for participants in Level Four, along with the Senior Executive Program. Work or developmental experiences require knowledge for NASA's political environment and strategic planning, as on Level Three.

At Level Four people are expected to interface with all project implementation organizations internal to NASA (Mission Assurance, Engineering, Operations, Acquisition) and external organizations (industry, academia, international partners, and U.S. governing bodies). They are expected to manage and be held accountable for the entire program or project which they are leading.

In terms of individual and team development activities, Level Four people should become adept in managing people (including recruitment, human resource development, coaching, mentoring and personnel evaluation) and teamwork (including team selection, motivation, rewards, empowerment and conflict resolution). They will be known for their decision making skills, creative problem solving and troubleshooting experiences. Working across Agency, Center and international lines, they learn to deal with other cultures and handle external factors which act on any project.

Of course, not everyone who chooses to enter the PMDP process will want to move through all four levels. Our NASA history and past practices show many talented, successful scientists and engineers have found their niche, working on technical tasks, managing small projects or balancing laboratory work and management.

Others will choose to progress through the ranks and up the four levels of accomplishment. They will enter the PMDP, meet with their mentor and/or supervisor regularly, plan their training and professional development activities, discuss their IDP and document their progress in their RoA, and make adjustments to the IDP at least annually, until the career objectives are fully achieved.

Moving from one level of achievement to the next higher one also involves a minimum of paperwork and procedure. First of all, a candidate's supervisor has the authority to recommend individual placement up to Level Two. To begin Level Three, however, the supervisor will have to submit a completed IDP or RoA from Level Two to the Installation PMC Panel for review and approval. Level Four entry requires the same procedure, plus concurrence from the Center Director and the Agency-level PMC. In each case, the Center's human resource organization will receive a copy of the revised IDP and completed RoA. Upon completion of each level the individual will receive an Agency certificate of recognition. For this to happen, the interested candidate must make sure that the local human resource department has forwarded the candidate's name to the NASA Office of Training & Development. Candidates with questions about this can call this office at 202-358-0300.

The primary responsibility for professional development rests with the applicant. We tried to keep the PMDP process as self-directed and self-monitored as possible, with plenty of assistance from mentors, supervisors and the PPMI. We have developed PMDP handbooks for the supervisor/mentor as well as the participant, and we ask that the applicants themselves who choose their mentors, if any, complete and process the documentation such as their own IDP and RoA, and that they schedule all meetings with mentor and/or supervisor for guidance and feedback.

The Installation Panels at the third and fourth levels set policy for the Center's PMDP to ensure fair and consistent treatment for all participants. They also approve "graduation" to the next level of accomplishment.

Likewise, the Program Management Council sets policy Agencywide for the PMDP and approves entry into Level Four. Our Headquarters PPMI Office coordinates the Agencywide project management training program in support of the PMDP and continues to periodically evaluate the PMDP as it relates to the quality of project management within NASA. With all this attention at various levels of NASA management, constant revision, upgrading and improvement of the PMDP process is expected as conditions change and as the needs of the Agency evolve.

With the increasing emphasis around the world on core competencies for project managers, the PMDP provides unlimited opportunities for NASA project managers to plan and manage their own future.

Better Decisions Through Structured Analysis: Overcoming the Subjective Tendencies of the Human Mind

by Morgan D. Jones

As a Central Intelligence Agency analyst of Soviet space programs in the late Sixties and early Seventies, I was constantly challenged to estimate the capabilities and intentions—past, present, and future—of these programs. I believe a fair review of my work in those years would show that most of my analytic judgments were on the money. But on those (dare I say "rare") occasions when I erred, as we humans are prone, I would review my analysis to see where I had gone wrong. Invariably I discovered that, for whatever reason, I had given insufficient consideration or weight to the alternative course of action which the Soviets had chosen.

I may have estimated, for solid and justifiable reasons, that a certain Soviet program would move in a particular direction . . . and it didn't. Or I may have estimated a program would ***not*** move in a particular direction . . . and it did. As we all know, one learns little from being right, and volumes from being wrong. And what I learned from my "rare," always galling, analytic failures was that, despite my keenest efforts, I had not been objective in my analysis.

> Do a quick exercise with me. Think of someone with whom you work closely every day.
>
> Now visualize that person's face and recall the last time you spoke with him or her.
>
> Now imagine that you read a newspaper article alleging this person has embezzled a great deal of money from your organization.
>
> What is your instant reaction?

You immediately formed an opinion, didn't you? *"That person is incapable of stealing?" Or, "Yeah, that person could be an embezzler."* Or something else.

Have you ever wondered why we humans impulsively take sides on issues? Why can't we approach problems objectively, without instantly harboring an opinion about them? The answer, provided by cognitive science, is that the human mind is programmed to be opinionated, to be biased, to think subjectively. In other words, we are incapable of being objective . . . try as we might.

Consider the following sequence of numbers: 40-50-60-___. What is most likely the next number? ***70***, of course. Buy why 70? There is an infinite number of alternatives, some quite intriguing, as in 41-51-61, 50-60-70, and so on. Yet, even though we may consider these alternatives, 70 will remain our preferred choice, because our minds instinctively, unconsciously perceive "40-50-60" as a pattern and are captured by it. And there's absolutely nothing we can do to un-capture it. Why? Because that's the way the human mind works.

This simple exercise demonstrates that the mental machinery with which we think is inherently flawed: *The Human Mind is Incapable of Being Objective. If the mind were really objective, it would not be captivated by the 40-50-60 sequence, and it certainly would not favor 70 as the next number over the limitless, more creative and more interesting alternatives.* (Immanuel Kant, the great 18th Century philosopher, theorized that the mind is not designed to give us uninterpreted knowledge of the world, but must always approach it from a special point of view . . . with a certain bias.)

We are always prone to favor one side or another of an issue or problem because we interpret that issue or problem through the lens of biases and mindsets we acquire through our life's experiences. The mind, unbidden and without our conscious awareness, creates these biases and stores them away in memory where they serve as unconscious controllers of the myopic, custom-made mental lens through which we view and interpret the world around us.

Our propensity to take sides—to think subjectively—is evident in the fact that we humans commonly ***"begin"*** our analysis of a problem by formulating our ***"conclusions."*** We thus start at what should be the ***"end"*** of the analytic process. Therefore, our analysis of a problem usually focuses on the solution we intuitively favor. Accordingly, we pay inadequate attention to alternative solutions; we look for and put store in evidence that supports our favored solution while eschewing evidence that does not, and at time we even maintain our support of the favored solution in the face of incontrovertible, contradictory evidence. The human mind really is a piece of work!

So what can we do about it? Or are we condemned to be ever victimized by our troublesome mental proclivities?

There are two things we can do. First, we can quit thinking that we're objective analysts. We are not. Humans are simply not objective. Second, we can organize—*structure*—our analysis in a way that ensures each element, each factor, of a problem is analyzed *separately, systematically,* and *sufficiently.*

There are many different ways to structure analysis. My most recent book, *The Thinker's Toolkit: Fourteen Skills for Making Smarter Decisions in Business and in Life*, describes some proven ones: problem restatement, pros-cons-and-fixes, sorting, chronologies, causal-flow diagramming, matrices, decision and probability trees, weighted ranking, hypothesis testing and utility analysis. All such techniques, by separating the elements of a problem in a logical, organized way, enable us to compare and weigh one element against another and to identify which factors and relationships are critical. Most importantly, these techniques compensate for the mind's lack of objectivity by compelling us to systematically consider alternative options and scenarios. Failure to consider alternatives is a principal cause of faulty analysis.

Structuring is to analysis what a blueprint is to building a house. Building a house, building anything, without a plan is, to say the least, ill advised. And what structuring is to a blueprint, the techniques of structuring are to a carpenter's tools—not components of a unified system for analyzing problems but an assortment of techniques that can be used singly or in combination.

Finally, structuring is not a substitute for thinking. It is rather a means to facilitate and empower thinking. Used properly and creatively, techniques for structuring will significantly enhance our ability to analyze, understand, and solve problems, lead to more effective analysis and sounder decisions, and make us feel better about those decisions.

Devil's Advocacy

One of the easiest structuring techniques—and a highly effective one—for countering our subjective tendencies is *Devil's Advocacy*, which seeks to prove a contrary or opposite view to the one that is favored. The power of devil's advocacy resides in our unconscious compulsion to favor an outcome or solution early in the analytic process. By artificially favoring—focusing on—a contrary or opposite view, devil's advocacy activates our instinctive, subjective modes of thinking: paying insufficient attention to alternatives, looking for and putting store in evidence that supports the facile view and holding fast to the view in the face of contradictory evidence.

Devil's advocacy is thus indifferent to the favored view, and that is the technique's principal strength—freeing the analyst to seek and obtain *new* evidence which was not sought in analyzing the favored view or, if obtained, was not believed. This thirst for, and receptivity to, evidence that contradicts the favored view is devil's advocacy's secret weapon, the extra dimension that makes it a formidable analytic technique.

It's easy to apply devil's advocacy because we don't have to learn any new analytic approach or device. We just follow our natural inclinations and let devil's advocacy do the rest. But there is always strong resistance, both within the analyst and within a peopled organization, to taking, or even recommending, the devil's advocacy approach.

Imagine that you have just come up with a great idea for making your company rich, for which your career and pocketbook will benefit handsomely. How psychologically motivated are you to find and give credence to evidence that your idea won't work or that some other idea will make the company greater profits? Not much. Or imagine that a senior manager in the company has conceived of a promising new venture and is pushing it. How receptive will that manager be to a proposal to gather and analyze evidence showing that the venture as originally conceived is flawed or that another venture offers greater promise? The very idea of undertaking a devil's advocate approach is naturally interpreted as threatening to those who have endorsed the primary (the favored) view.

Consider the hypothetical case of a large manufacturing company which, despite aggressive advertising, is faced with rapidly declining sales of its principal product. The company's management has determined there are essentially two options: continue production of the product with modifications to improve its appeal, or terminate production. If I were the company CEO, I would establish two competing working groups, one to seek evidence in support of continuing production, the other to seek evidence in support of termination. I would charge each group with presenting their findings to the board of directors, which would then make the decision. To assign these two inherently conflicting analytic tasks to a single working group would be tantamount to letting a single lawyer both prosecute and defend someone in court.

We can, of course, employ the devil's advocate approach even when we are doing the analysis ourselves, alone. We simply work one view of the problem and set our conclusions aside for a day or two to let our focus, mindset, and bias relax and fade a bit. We then go to work on the other side, trying to prove just the opposite with different evidence.

Whether conducted by competing groups or a single individual, devil's advocacy will, with virtual certainty, open the mind of the analyst to new dimensions and perceptions of the problem, poking holes in fallacious, self-serving arguments and stripping away poorly reasoned and thinly supported evidence. That's the wonder and delight of the devil's advocate approach.

Separating Utility and Probability

Another troublesome feature of our minds is our tendency, when analyzing and discussing options for solving a problem, to address what we seek to gain from a particular course of action (that is, the *utility* we see in it) at the *same time* that we address the *probability* that this course of action will produce the desired outcome. Separating the analysis and discussion of utility and probability is essential to objective analysis, because these are fundamentally different subjects, each with a different focus and, especially, a different language. Issues are raised and positions voiced in analyzing utility that are absent in analyzing probability, and vice versa.

Utility Question: If we implement "Option A" and "Outcome X" occurs, what is the utility (the benefit, the advantage)?

Probability Question: If we implement "Option A," what is the probability "Outcome X" will occur?

Listen, when colleagues discuss alternative courses of action. They will casually, unconsciously, switch back and forth between utility and probability, often in a single sentence, blissfully unaware they are doing so and unaware of the consequences.

The district manager has convened a meeting of her sales staff. "Sales of our Super FAX 5000 are slipping," she declares. "What can we do about it?"

Jack: *"Offer complimentary rolls of FAX paper."*

Manager: *"Not a bad idea. That might interest some customers [Utility], but it probably wouldn't last [Probability]."*

Jill: *"How about offering extended maintenance warranties?"*

Manager: *"I like that. The 5000 is very reliable, so it wouldn't cost us much [Utility]."*

Jill: *"It might [Probability] even save us money [Utility]."*

When we mix elements of utility and probability together, we confuse the issues and muddy the analytic waters because the assumptions, biases and preconceived notions that drive our assessment of utility are entirely different from those that drive our assessment of probability. Our assessment of utility determines which option is most *attractive*. Our assessment of probability determines which outcome is most *likely*. In other words, utility determines what we want, probability what we get.

To avoid the adverse consequences of intermingling these two basic components of analysis, I recommend addressing utility first, by asking the Utility Question of each option: If we implement the option, what benefit, profit, or advantage does its outcome provide? Then rank the options by the comparative utility of their outcomes. Spend some time at it. Ignore the probabilities for the moment. You'll be amazed at how focusing your mind on just utilities empowers your thinking. When you are comfortable with your rankings, then and only then address the probability of these outcomes by asking the Probability Question. For example:

Utility Rankings of Desired Outcome	Probability of Desired Outcome
Option C	10%
Option A	50%
Option E	70%
Option B	40%
Option D	90%

You will find that separating analysis of options into two steps is easy because it simplifies the process and, as I said, empowers the mind by enabling it to focus on one element at a time: first utility, then probability.

But then what? How do we combine the utility rankings with the probabilities? We do it with an ingenious device called *Expected Value*. We compute expected value by multiplying the utility of an outcome by its probability of occurring. This is easily done if utility can be expressed in terms of dollars. But if it can't, we quantify utility on a scale of 0 to 100, where zero is the least utility and 100 the most. We then multiply the utilities by their probabilities to determine their expected values.

Utility Value of Desired Outcome	Probability of Desired Outcome	U x P = EV
Option C 90	10%	90 x .1 = 9
Option A 70	50%	70 x .5 = 35
Option E 30	70%	30 x .7 = 21
Option B 20	40%	20 x .4 = 8
Option D 10	90%	10 x .9 = 9

In our example, Option A is strongly preferred. It is noteworthy that neither the option with the *most beneficial* outcome (Option C: 90) nor the one with the *most likely* outcome (Option D: 90%) emerged as the favorite. Option C had too little probability, and Option D had too little utility. By integrating utility and probability into a single quotient, *Expected Value* affords us a powerful and reliable means of evaluating, comparing and ranking options.

The only way to learn devil's advocacy, utility analysis or any other structuring technique is through practice. So try it. You'll be surprised how structuring opens up the complexities of a problem and produces valuable insights into its solution. Such is the power of structuring your analysis.

TechTracS: NASA's Commercial Technology Management System

by Kevin Barquinero & Douglas Cannon

In response to the Administration's technology policy, the National Performance Review and the needs of our nation's industries, NASA Administrator Daniel Goldin issued NASA's *Commercial Technology: Agenda for Change* in July 1994. The *Agenda for Change* outlines the national technology policy, Agency decisions made to implement the national policy, and the Agency's newly defined Commercial Technology Mission. This paper explains the mission and *TechTracS*, the program's commercial technology management system.

Since its inception, NASA has recognized that the technology it develops in the course of its missions has relevance to the general economy. Consequently, the Agency has maintained a technology utilization program to transfer this technology to industry, but this early program had at best a passive relationship with industry. NASA disseminated its technical information routinely and reacted to company inquiries as they came up. Serendipity was the "management system."

Today, economic development is an important national goal. Marketing NASA technologies, creating new business practices for entering into partnerships with industry, establishing and reporting metrics, creating and updating an electronic network to better serve our customers, and implementing a training program to educate NASA employees to effect change in our culture are the main elements of the new, proactive commercial technology program. Taken together, these activities represent a fundamental shift in how the Agency works with industry to commercialize its aeronautics and space technologies. No longer is NASA relying on serendipity. Rather, the Agency is actively working to move our knowledge from our programs and laboratories through companies to the marketplace.

The core process in this new way of doing business is "knowledge management." NASA civil servants, contractors and grantees frequently create new knowledge of technology during its aeronautics and space missions that has commercial value embedded in it. First capturing and then managing this knowledge are the most critical functions of the commercial technology offices at each field Center. Without control of our technical knowledge we are handicapped in our ability to maximize the number of NASA-industry collaborations. Conversely, having a complete database of all NASA technology investments, along with an assessment of the commercial potential of these technologies, will greatly enhance the process of matching NASA technologies with industry needs. Spurred on by NASA's 1995 Strategic Plan calling for a 100% inventory of NASA technology for commercial potential, a small team set out to develop this knowledge management system.

TechTracS Management Stages

The purpose of *TechTracS* is to identify and capture all NASA technologies with commercial potential into an off-the-shelf database application, and then track their progress. As such it is, in essence, an "asset management system" much like those found in successful corporations. This management system consists of four stages:

- The first is to develop an inventory of the Agency's entire technology portfolio and assess it for relevance to the commercial marketplace. NASA has already established an initial operating inventory database and is one of the first agencies to do so. The commercial assessment is the responsibility of each NASA associate administrator and is conducted by the field center managing the technology activity.

- Those technologies that are identified as having commercial potential will then be actively marketed to appropriate industries. This is the second stage. Making our technology inventory available over the Internet is a key step in this stage. Such valuable information is thus delivered quickly and evenly to all who seek it.

- The third stage is when a NASA-industry partnership is entered into for the purposes of commercializing the technology. The sum totals of NASA's contribution to these partnerships are tallied to show progress in the partnership requirements specified by the National Performance Review.

- The final stage is to track the technology's success or failure in the marketplace. While this system is initially aimed at leveraging NASA technologies into the marketplace, it can also be used to better leverage our technologies across NASA's internal missions as well as technologies across national initiatives involving multiple federal agencies.

In addition to these stages, *TechTracS* will track a number of other management processes such as patent execution, license negotiation and TechBriefs abstract preparations in order to assure complete transfer of NASA technology.

Assessment and Inventory

Technically, *TechTracS* is a distributed network of relational databases located at each NASA field Center and Headquarters. It is a client/server architecture that has user-friendly interfaces and is platform independent. It was developed for NASA by a small team at the Research Triangle Institute using ACI US' 4th Dimension™ client/server relational database. It is a virtual office that enables cooperative data management and services such as metrics analysis, Internet services, automated documents and letters, ad hoc reports, on-line clients, email services and multimedia capabilities.

The effectiveness of *TechTracS* is evident by NASA's success in meeting its strategic goal of assessing 100 percent of its technologies for commercial potential. Working with the comptroller's office and the procurement office, we successfully merged their respective databases, each Center's technology database, and a newly developed partnership database into a single relational database in *TechTracS*. For the first time NASA's entire FY 1995 budget of $14 billion was correlated with its procurements, technologies and partnerships (which account for nearly 90% of the Agency's budget).

For any given year NASA manages over 10,000 contracts, grants and cooperative agreements ranging across over 25,000 program areas. When combined, these create a matrix with more than 50,000 areas of unique work tasks which are then allocated to 10 field Centers and Headquarters. These 50,000 work areas represent an annual NASA investment of approximately $12 billion. This entire structure and its set of relationships are modeled in *TechTracS*.

From July 1 to September 1, 1995, we assessed more than two-thirds of these 50,000 areas. In that time, 2,700 new technologies emerged and approximately 10 to 15 percent of these areas have been assessed as having commercial potential. More than $600 million or about 5 percent our annual investment in these work areas qualify as technology partnerships.

This is the first time that a Federal agency has conducted such an extensive inventory of its programs and technologies for technology transfer. The initial results are impressive, but as we improve our reporting system and when both NASA staff and the public become more knowledgeable of it, we believe we will increase the annual number of new technologies created by a factor of three over the next five years. We also believe the percentage of our programs and technologies with commercial potential will increase to 25 percent over the next five years. Finally, by 1999 we expect to increase the amount of resources we invest annually in partnerships from 5 to 20 percent.

Partnerships and Tracking

TechTracS offers benefits beyond its enhancement of internal commercial technology management. It

makes possible customer services that heretofore were impossible to offer. First, and most importantly, companies now have an easy-to-use, searchable database to locate NASA technologies that may solve their problems, *wherever that knowledge may be*—at a NASA lab, a contractor facility, or a university. Making the human connection between the knowledge owner and the knowledge seeker is the first order of business in technology transfer. *TechTracS* accelerates this process.

The next step in technology commercialization is that a relationship must be established between NASA and the knowledge-seeking company. Once this relationship is established, relevant information regarding the new partnership is stored in *TechTracS*. The National Performance Review expects 10 to 20 percent of NASA's budget to be in R&D partnerships with industry. Because of *TechTracS*, the Agency is able to report accurately to the Administration its progress towards meeting this goal.

While partnerships are a measure of the relevance of NASA technology to the U.S. economy, they do not in and of themselves contribute to the economic well-being of the nation. Companies must take the NASA knowledge they acquire and apply it in a new or improved commercial process, product or service. For NASA, success occurs when the company makes new capital investments, creates new jobs, and/or sells new and improved commodities in the marketplace.

TechTracS is able to capture these "success stories." With immediate access to this data, NASA will be able to demonstrate to the Congress and the American people the relevance of its investment in aeronautics and space for advancements in science, technology, and contributions to the United States economy.

FY 1996 Goal: Training

With the assessment of NASA's entire investment base complete and ongoing, the next goal for the NASA team is to train individuals to take advantage of this system. Two strategies are being pursued:

- In partnership with NASA's executive training professionals, an internal training course is being developed for NASA civil servants, contractors and grantees. This course will be part in a series of NASA training opportunities that instruct NASA managers, scientists and engineers on the importance of the Commercial Technology Mission, mechanisms for entering into partnerships with industry, *TechTracS's* role in tying this all together, and how to use *TechTracS's* information system.

- In partnership with the *TechTracS* industry team, a similar training course is being developed for companies most likely to benefit from NASA's technology transfer. Like its in-house counterpart, this course informs the participants of NASA's Commercial Technology Mission and partnership options. In addition, it will train these individuals on how to access the publicly available portions of *TechTracS* remotely so that they can seek information about NASA technologies on their own for their benefit or on behalf of a customer.

Industry training is key to the commercial exploitation of this information. No single individual, team, organization or network of organizations has enough knowledge to maximize the transfer and commercialization of NASA technology throughout the U.S. economy. The economy is simply too big and too complex. However, many individuals, joint teams, multiple organizations and even networks of organizations can maximize the transfer and commercialization of NASA technology throughout the U.S. economy together. *TechTracS* training is the empowering tool. Upon completion of this course the attendees will receive a NASA certificate attesting that they understand NASA's Commercial Technology Program and are skilled in using *TechTracS* to locate NASA commercial technology.

The continuing evolution of NASA's commercial technology management system can be a major factor in such industrial advances and economic development. Success stories will hopefully become commonplace. In analyzing those success stories, *TechTracS* should be able to illustrate the value and importance of placing the right technology knowledge into the right hands at the right time.

Today's Management Technique and Tools: Are We Missing Something?

by Ernest M. Hahne

For decades, bookstore shelves have been filled with all manner of business guidance and management philosophy. Today we can choose from hundreds of software programs that, taken together, claim to be the solution to any management problem in any manner of approach. Every month our mailbags are overloaded with offers for better training or more effective consultation and business reengineering support.

With this much help, why do so many of us and our organizations continue to perform below par? Have the gurus of management science missed something that we all need to know? Is problem solution just "too hard," given the complexity of modern business and government requirements?

I do not believe it's "too hard." I do believe something has been overlooked. This paper describes an approach that was used to uncover this missing link, formulate a solution approach and test solution validity against in-process program needs rather than in a rarified laboratory environment.

Test/demonstration results indicate that we do not need to develop any new management principles. Rather, we need only to change our technique and some processes we use for application of existing, well-known principles. This rearrangement of technique and process application does require some modification and addition to our management tool set. However, revolutionary change is not called for and may, in fact, be counterproductive.

Identifying the Missing Link

Several study reports concerning numerous program failures within NASA, the DoD and industry in general prompted a search in the late 1980s for a missing management process link.[1] Based on the author's personal experiences as a program and systems management practitioner and consultant, an obvious question arises: Why do so many ventures that appeared sound at startup continue to report "surprising" indications of pending or actual failure? How can this be, given industry's significant investments in employee training, skills, hiring and acquisition of the "latest" in management information system (MIS) capability? What, specifically, goes wrong?

A similar question was asked in the mid-1960s by a small government team tasked to improve the existing program acquisition and management practices.[2] This team (with the author as a participant) reviewed numerous programs such as the FB-111, C5A and MinuteMan. We developed a lessons learned list of common reasons for major program problems. The list (unpublished at that time) was used as a guide for the creation of the MIL STD-499 Systems Engineering Management and early versions of the DoD 7000.2 Cost/Schedule Control Systems Criteria. The similarity between the data reported in the 1980s and in the 1960s list was very evident.

A direct correlation yielded surprising results. The only difference between the two was the increased length of the 1980s list.[3] The 22 new items, resulting in a new total of 59 Failure Lessons Learned, related primarily to software development and integration, and the rest to funding issues. In the 1960s relatively few programs had significant software content, and funding was not the issue it is today. However, what was the explanation for the rest of the list? A sample of the expanded list is illustrated in Figure 2.

Two approaches were addressed to explain the repeatability. The first, involving a validation review of existing techniques and processes, was rejected as time consuming and probably fruitless. Too many of

us have "been there, done that." The approach taken was to search for a root cause, starting with the fundamentals of the overall program/production and operations management process: specifically, how organizations convert input data and raw materials into products and services that are economically useful to an end user. Fundamentally, this was a repeat of a 1966 study (conducted by the author) that resulted in a principle of management entitled "System Duality."[4]

	Program Failure Lessons Learned
1	Inadequate requirement specifications as part of the RFP severely compromise the overall acquisition effort and the quality of the delivered product.
2	Complete Interface Control Specifications between hardware and software and software are critical.
3	Adding manpower is rarely a solution to development schedule problem correction.
4	Training contractor and user personnel is essential.
5	Program management cannot specify good development criteria and just expect good development to happen.
6	Inadequately defined user requirements result in inadequate system/software specifications that lead to a contractually acceptable product that is operationally deficient.
7	Close and continuous monitoring at detailed schedule levels is essential. Risk Management needs should drive the level of detail.
8	Senior Management must be knowledgeable and involved in contract performance.
9	Communications and related documentation is critical to effective program configuration control and completion, i.e., ICWGs, minutes, telephone logs, Product Development Handbooks, etc.
10	Key personnel and management turnover causes critical problems.

Figure 2. *Program Failure Lessons Learned (Early 1990 Compilation).*

The System Duality concept states that management always deals with two interrelated systems, as illustrated by Figure 3. One is the organizational system (O) responsible for product production; the other is the product system (P) itself that is intended to satisfy the end user needs.

The concept also states that the key element of management control over the process was the Transform Function, as illustrated by the overlap of the O and P systems. Thus, management control metrics would encompass planned versus actual cost, schedule and technical performance data, describing the (O) system conversion of inputs to deliver a product (P) to the user.

The author's re-evaluation of the concept supported its validity as described, and as applied by practice. Industry has reams of processes available to address all elements of Figure 3, with two exceptions. These are highlighted in Figure 3 by the items contained within the dashed boxes. These two items appear to be the missing link within our management processes. Specifically, the absence of predictive and integrated risk analysis concerning the probability that our plans will fail at some significant cost and, also, our failure to assure timely review and feedback on developing results to the end user. In today's common practice, user feedback usually comes too late for easy design change. Essentially, the risks have already been incurred.

Risk Management Planning

Risk may be defined as the exposure to some likelihood of experiencing some loss. A loss can be expressed in many ways, such as a capability, economically, in terms of time, politically, socially, etc. The operative word in the definition is *some*. Loss magnitude can range from trivial to catastrophic. Loss occurrence can range from low to very high probability. Losses that do occur are usually additive.

There is *always* a likelihood of experiencing some loss. For previously demonstrated things, both the loss likelihood and magnitude may be known with

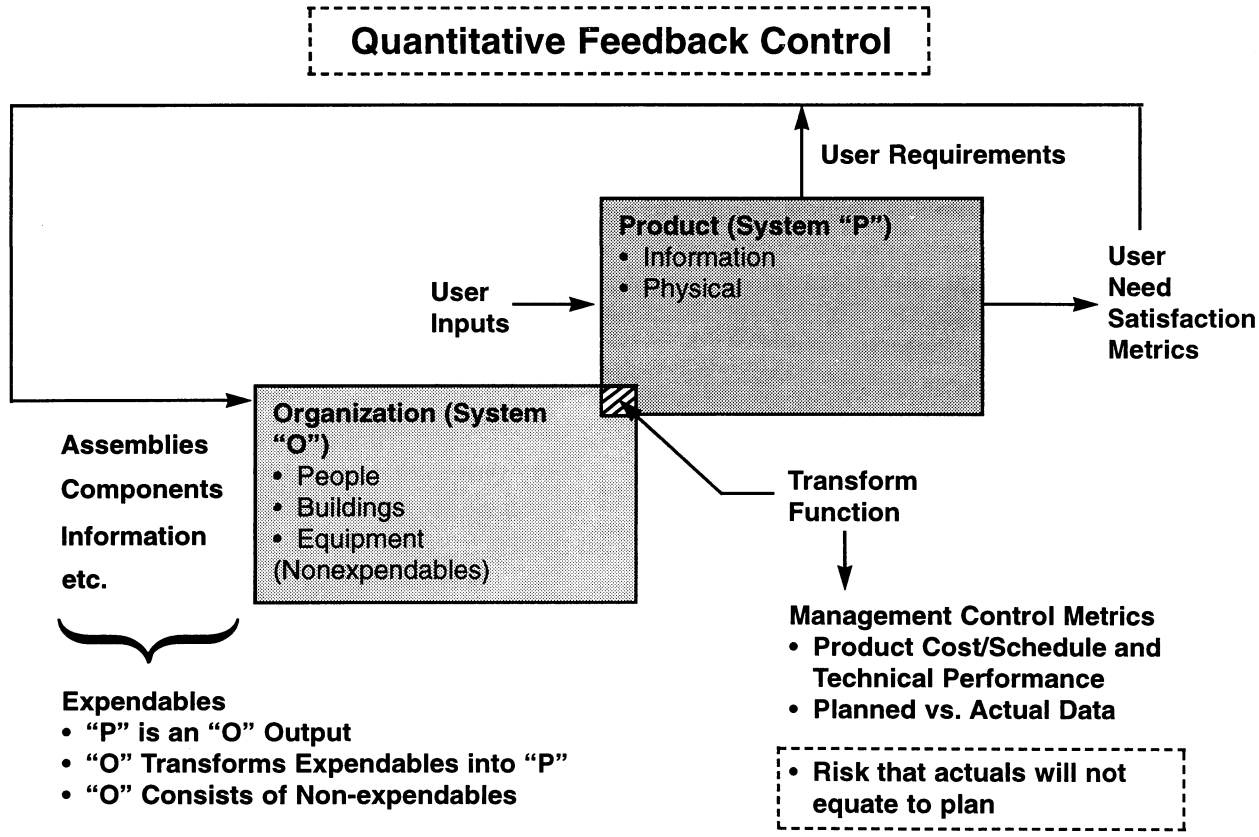

Figure 3. *System Duality Concept.*

reasonable accuracy. For things not demonstrated, a significant range of uncertainty may exist concerning not only both parameters, but also the mechanism responsible for the exposure.

Another finding from the Figure 3 study was that many causes for program failures appeared as the result of planning errors of omission. Items 1 and 6 on the Figure 2 list exemplify this. The complete list provides several additional examples of planning inadequacy that suggest the need to change our basic planning concepts.

First, we must admit that our biggest planning problem is that we don't know what we don't know at process startup. The author and others call this the (I DON'T KNOW)^2 problem. If we don't know that an issue exists, how can we possibly plan to avoid it?

Fortunately, there are many tools available that, if used properly, would surface critical planning questions. Unfortunately, too many of us do not use them or are unaware of their existence.

One such tool is the list represented by Figure 2. Its use as a checklist is extremely valuable for risk avoidance planning. Several other similar tools will be described later.

Another concept we should embrace involves the notion that in the absence of risk, management becomes basically unnecessary. Stated another way, we should conclude that the primary purpose of management planning is to provide a roadmap and measurements for avoidance and/or control of risks that attend development of any new product. On average, most of us currently practice reactive risk management. We must change our practice to emphasize preplanned or predictive risk management.

Another challenge to conventional thinking is that risk taking is bad. We can advance only by taking

risk. The key here is that any risk taken must be affordable.

Finally, we must all realize that predictive risk planning requires a greater investment of time, skills and experience. Numerous studies show that significant payback can result when an upfront investment is dedicated to more detailed planning. Figure 4 illustrates data from two such studies.

The above recommended changes to our conceptual planning approaches are illustrated pictorially in Figure 5. Our current approach is illustrated at the top left. We have a plan for concept A with no upfront risk assessment. Implementation results are illustrated at the right. Note that "surprise" risk losses are a significant part of total cost, that total cost exceeds what was planned, and that a part of planned value was lost due to risks having occurred.

Just below we show the same Concept A plan but have included risk assessment. Note that total cost now includes the risk cost. Of course, the advertised cost is higher than one that did not include risk costs. Would the second plan and price be a winner?

An alternative plan (Concept B) including its risk costs is shown at the bottom of Figure 5. Note that total cost as illustrated is physically smaller than A above it and also that the risk budget is smaller. Planned value results remain approximately the same. (B results from trade studies that improve the baseline of A.) This figure illustrates the objectives that management techniques and tools are intended to achieve.

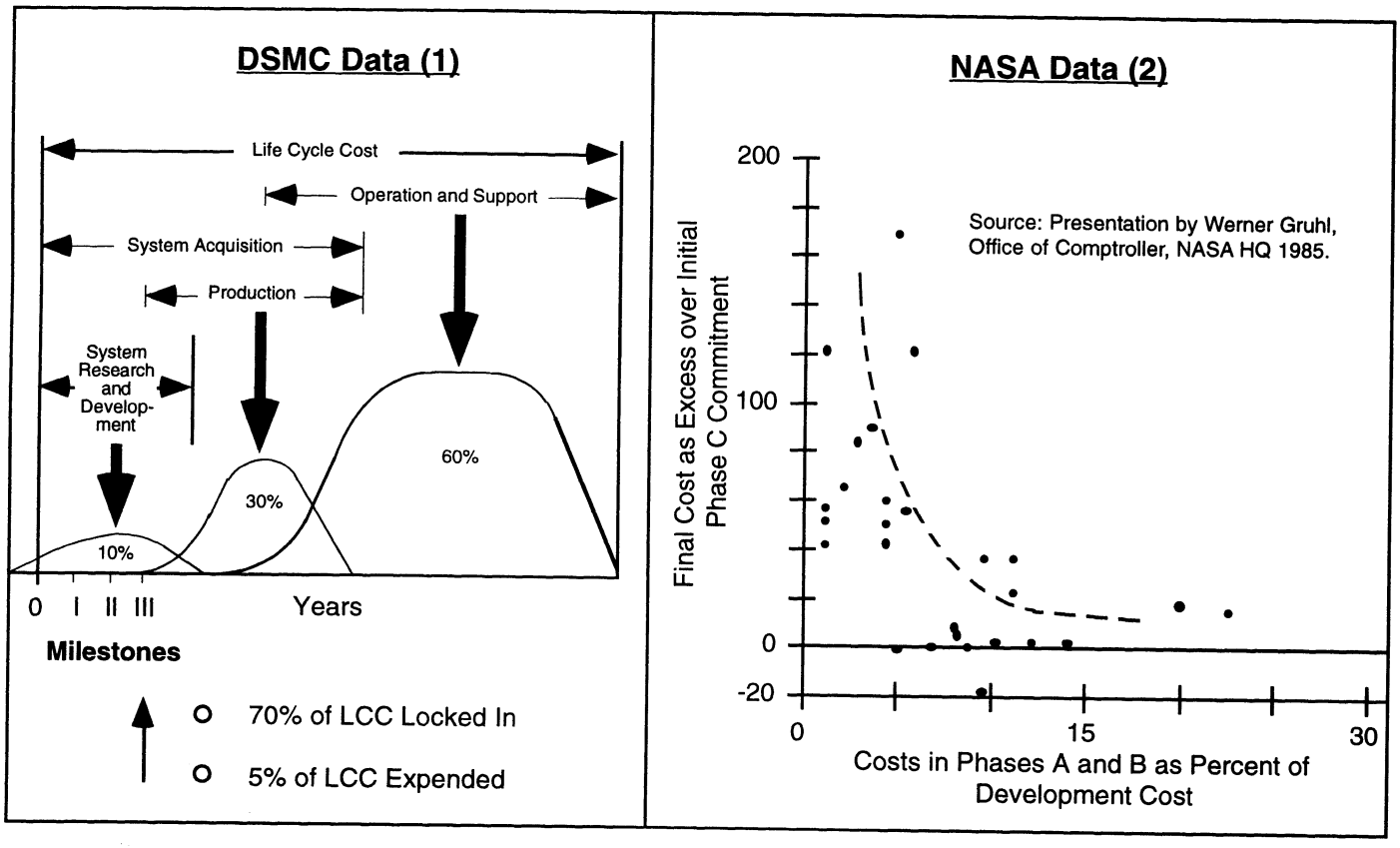

(1) A stretchout of MS 1 schedules of 25% or more, at added cost, would result in significant Life Cycle Cost (LCC) payback.
(2) An increase in cost expenditure during phases A/B results in a significant reduction of phase C overrun.

Figure 4. *Cost of Poor Planning.*

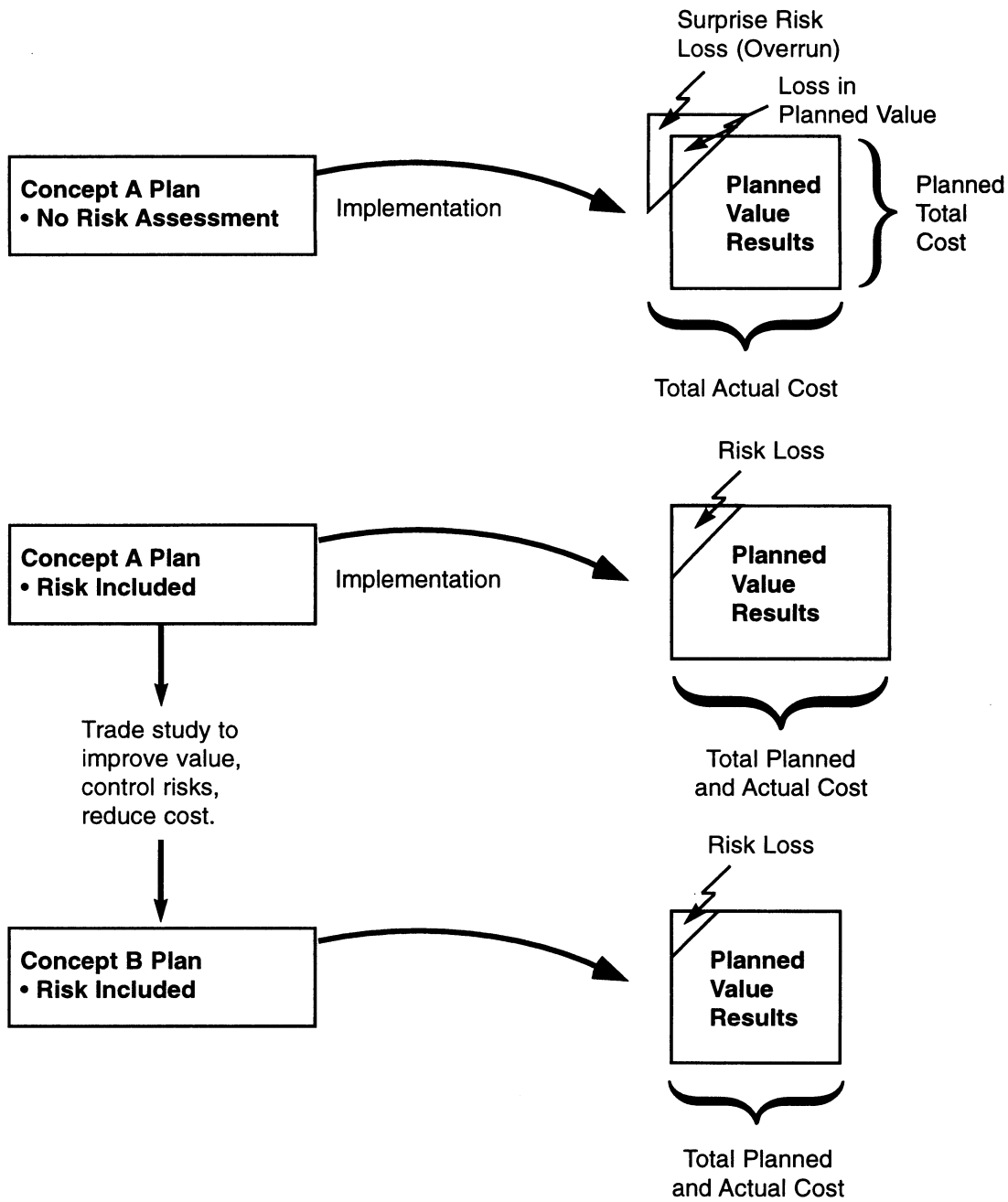

Figure 5. *Risk Planning Concept.*

Systems Engineering: A Primary Risk Analysis Technique

Risk analysis has a clearly definable starting point. Specifically, that point includes complete and quantified definition of end user needs, related constraints and measures of effective user results. This is an iterative process. The existing classical processes for systems engineering provide the foundation for performing predictive risk analysis and planning. This process starts with the end user needs and concludes with the assured delivery of an acceptable end product.

This paper does not address systems engineering process applications for resolution of all risk analysis needs. The applications that are addressed focus on how risks within a design concept are surfaced

and how *relative* measurements can be made concerning their probability of occurring and the magnitude of loss if they occur. These relative measurements will serve as a flag and guide to management for their investment of resources and attention to avoid or control each identified risk.

An overview of the systems engineering process as commonly discussed in most publications[5] is shown in Figure 6. Note that risk analysis is one of many supporting functions to the centralized functions of system evaluation, trade studies and optimization.

Conclusions concerning the repeatability of the Figure 2 Program Failure Lessons Learned suggest that Figure 6 should be revised as shown in Figure 7. These revisions should aid future system engineering practice as needed to achieve predictive risk planning and more certain risk control. All suggested revisions can be correlated to one or more Program Failure Lessons Learned.

Revision 1: Insert risk analysis within the centralized function block. As a supporting function, many interpreted it to be a standalone requirement.

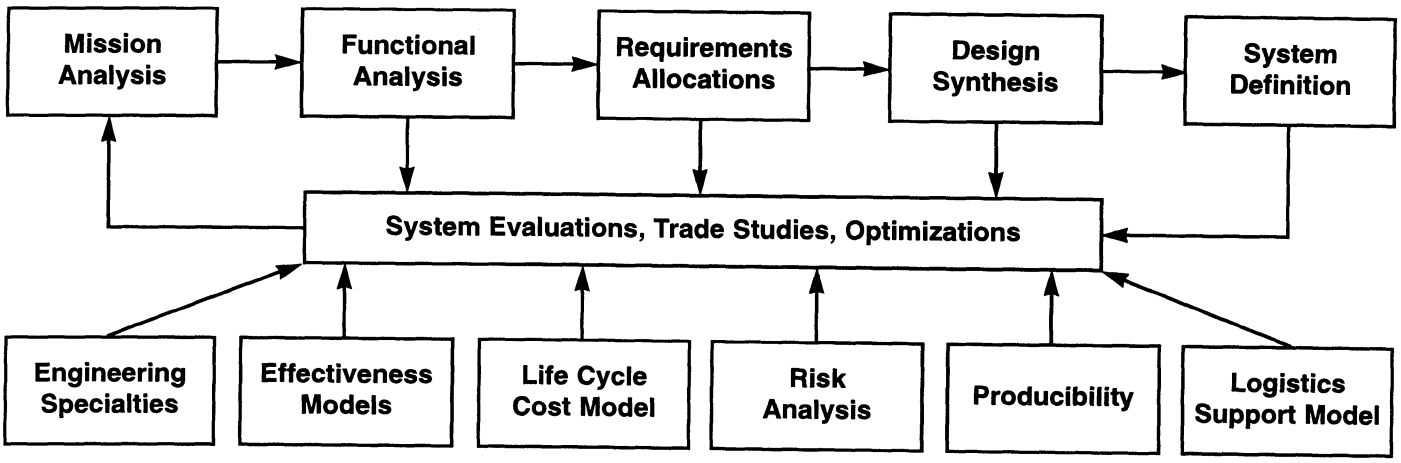

Figure 6. The Classical System Engineering Process.

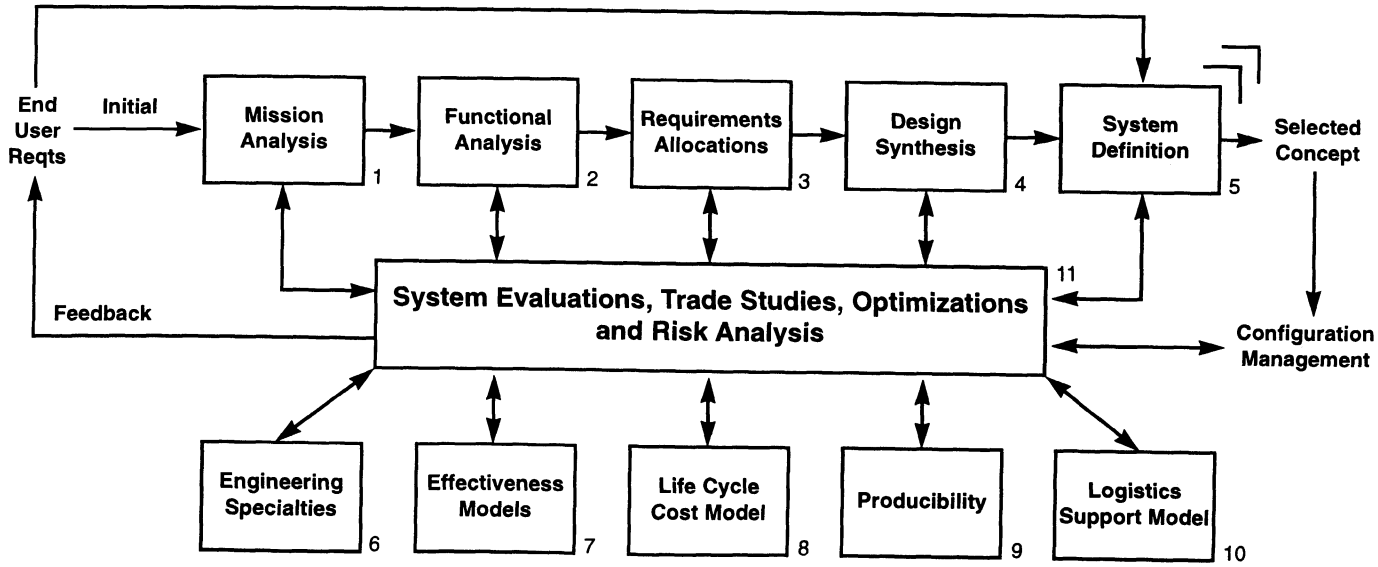

Figure 7. Suggested Revisions to the System Engineering Process.

Factually, that is how it is treated throughout today's DoD 5000 Series, NHB-7120, and most other publications. The transform function, previously shown in Figure 3, requires that risk analysis must be integrated within and across all functions.

Revision 2: Add the end user as a major function at the process beginning. Most of us overlook the criticality of this function to systems engineering success. Initial user inputs should only be introduced to block 1, Mission Analysis. Future inputs should be introduced into both block 1 and block 5, System Definition. Feedback should only emanate from block 11.

Revision 3: Clarify that all communications between the centralized and supporting functions are two-way, and for new problems, real time. Use double ended arrows. These paths contain the data for process direction, authorization and reporting of process problems and results. Real time communication control is critical to effective conduct of the Successive Refinement Process of Systems Engineering. (Avoid surprises at major progress reviews.)

Revision 4: Annotate block 5, System Definition, to emphasize that the purpose of the entire process is to select a best alternative based on a trade study among alternatives. Too many programs fail because the trade study was inadequate or not conducted.

Revision 5: Add Configuration Management (CM) as an administrative support process within systems engineering. CM should not function as a decision authority for change or approval. Reserve this role for the centralized authority of block 11. Also, all trade study data should be controlled under CM. Trade study results and decisions are totally dependent on the assumptions made and the analytical technique used. If these data are not available for future change analysis, chaos can result.

Trade Study and Risk Planning

Effective risk management depends on trade study performance and trade study is the heart of systems engineering. Systems engineering and risk management are totally intertwined.

While the actual performance of a trade study is usually complex and difficult, the fundamental concept is easy. (See Figure 8.)

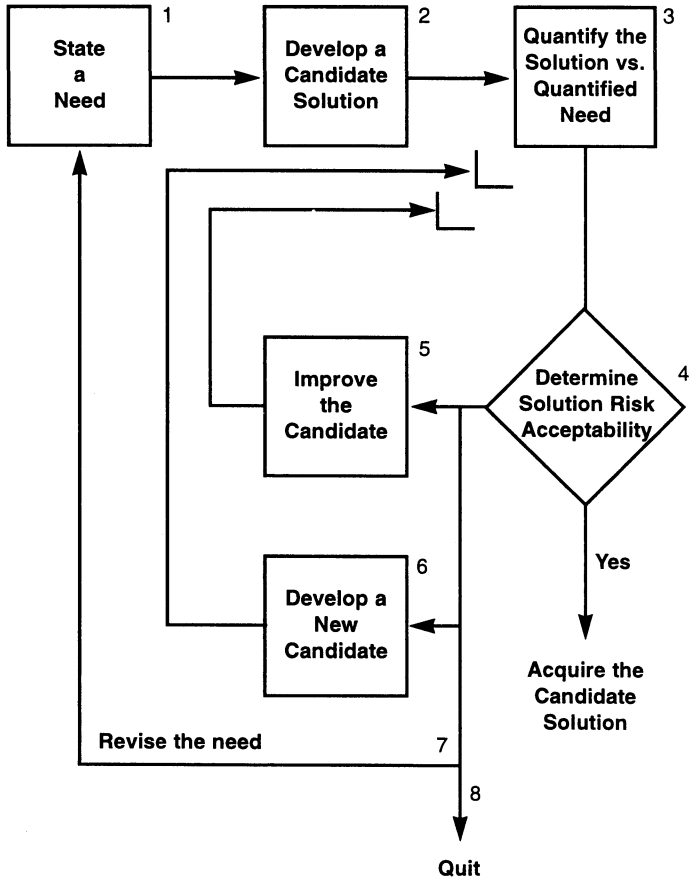

Figure 8. A Simple Trade Study Process.

If a first pass through steps 1 to 4 don't yield a yes (it usually won't), exercise paths 5, 6 and 7 singly or in parallel. At this point block 4 becomes the trade study function where the best of all available choices is tested for acceptability. If a yes is not obtained, repeat 5, 6 and 7 or decide you have no acceptable solution approach and go to path 8 "Quit" or No Bid.

Obviously, a first step is to define an initial candidate solution that demonstrates feasibility for satisfaction of end user needs. Since this paper is primarily about techniques that avoid or mitigate risk, three major recommendations must be made concerning step one. First, obtain every scrap of detail available concerning user needs, related constraints and measures of minimally acceptable performance of the

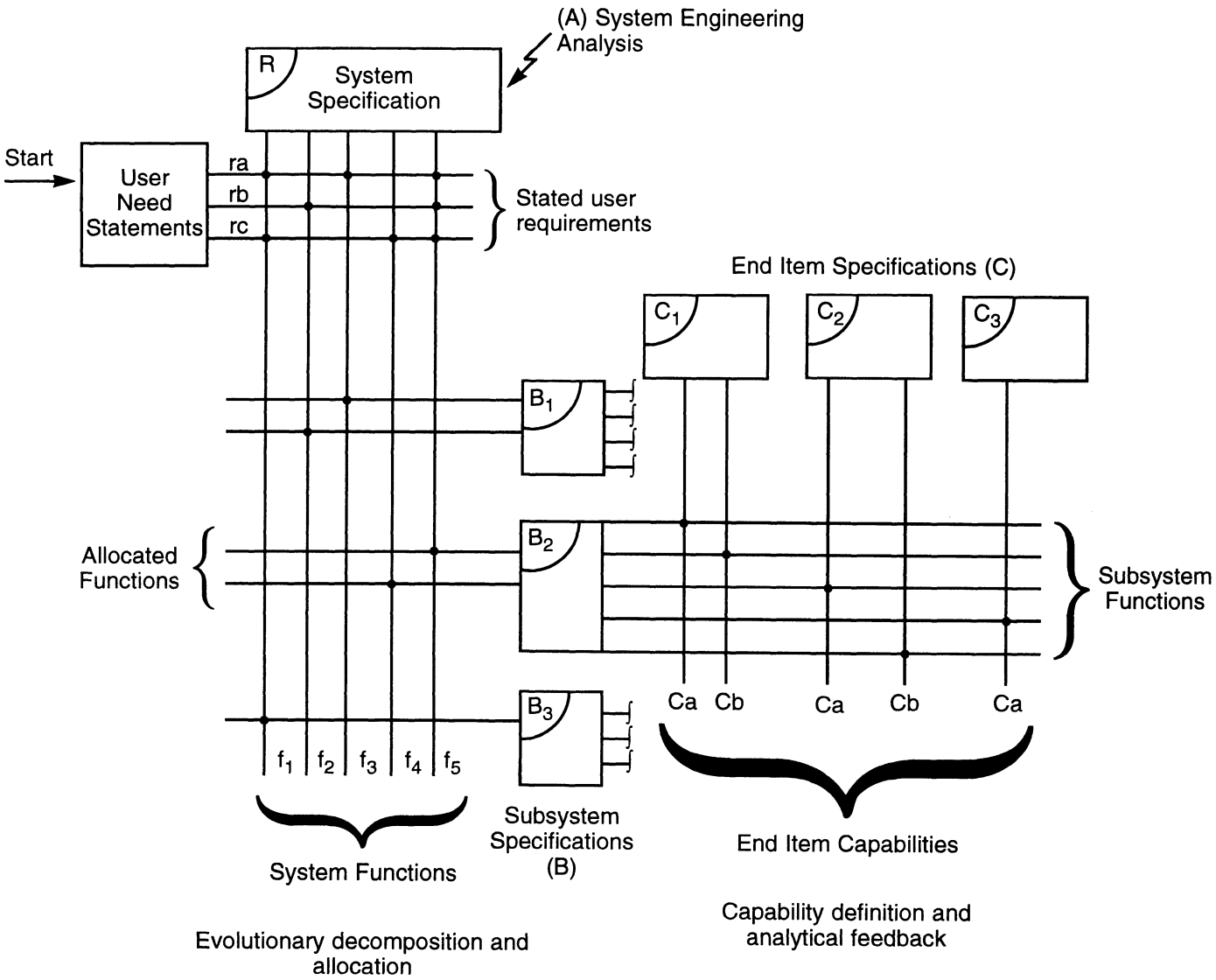

Figure 9. A Typical Candidate System Design Matrix.

product/system to be delivered. Help the user create this data if it is inadequate. Second, make sure that only highly skilled engineers experienced in the disciplines needed for initial solution definition are assigned. Third, avoid elegance in first cut approaches. Emphasize substance of need and why off-the-shelf solutions may be inadequate for user need satisfaction. Failure to adhere to the above recommendations will increase startup cost and may result in unforeseen life cycle risk in resulting program plans.

Design Synthesis

Creating the initial system solution candidate requires most of the functions of the System Engineering process illustrated by Figure 7. Initially, blocks 1, 2, 3, 4 and 6 are most critical. Difficulty in creating their data products suggests that team experience may be inadequate or that for block 4 the existing technological art is too limited. The latter issue represents a major risk that is discussed later.

Without belaboring how the Figure 7 processes are performed, the synthesized system concept that results from block 4 could result in a model as shown in Figure 9. At the top left are stated user needs (ra to rc) that initiate the analysis process and definition of specific system functional requirements, f_1 through f_5. These functions are allocated to subsystem B_1, B_2 and B_3. Further functional decomposition occurs and, as shown for B_2, these subsystem functions are allocated to end items C_1, C_2 and C_3. They provide the capabilities to perform the system and subsystem functions: for example, Ca and Cb for end item C_1.

A basic feasibility test of this synthesized design is conducted by asking the following questions:

1. Can end item capabilities, as identified, be reasonably satisfied by existing or new equipment known to be undergoing development?

2. Are there obvious reasons why the end items within the model would be difficult to produce or support logistically?

3. Are there difficult and perhaps unacceptable engineering specialty issues related to reliability, maintainability, human factors, safety, etc., concerning any of the end items or their integration?

4. Are the end items high cost? Is the schedule for their availability reasonable?

A negative response to one or more of the questions requires repetition of the Figure 7 process until two or more alternative synthesis models that demonstrate feasibility of satisfaction of end user needs are defined.

Note: If at least one feasible candidate cannot be defined, stop work. If this is due to unavailable technology, consider initiating an R&D project.

Establishing plausibility of each feasible design follows the Figure 7 process but emphasizes efforts through blocks 7, 8, 9 and 11. These activities are complex, time consuming and relatively expensive. The Program Failure Lessons Learned List items (Figure 2) suggest they are among the most poorly performed systems engineering activities. However, without some reasonable data input from them, effective performance of the block 11 trade study is hopeless.

Experience has shown that designing for perfection is infinitely costly and time consuming. Also, given the rapid growth of technology while we are designing, it's probably impossible. We need to change our selection and approval paradigm from a search for what's best, to a search for what is "least bad" but acceptable for satisfaction of known needs.

I do not suggest eliminating classical system effectiveness and life cycle cost analysis processes. I do advocate doing them only in areas where user need satisfaction would be significantly impaired by their absence. For any other purpose they tend to waste resources and time.

The following sections present a "poor person's approach" to resolution of these measurement needs.

Risk Management Decision Making

The proposed poor person's approach emphasizes the drawing of management decision attention to what most of us call grey areas.

Critical issues are usually obvious early on. (They can be enhanced by the judicious use of past lessons learned checklists.) Once known, they are sometimes given more attention than deserved.

Small issues are often set aside, as they should be, unless their impacts can be shown to grow.

The vast majority of issues are somewhat vague and, unless prioritized relative to their potential contribution to end user need and risk, consume vast amounts of management time and "self-protection" funding.

In addition to prioritization, another concept drives implementation of the poor person's approach. Rigorous mathematical analysis is often no better than relative magnitude estimation by an expert. Management decision making requires a "go/no-go"

approach to metrics, not the precision that results from sophisticated and often computerized methods. The latter are usually costly and add little extra value.

Following is an application example of the poor person's approach to decision making, using an example solution candidate matrix based on the simple model shown previously in Figure 9. This measurement application example is shown in Figure 10.

Measurement begins at the upper left with user definition of value for each stated requirement. (For this discussion, limit this to value statements concerning mission functional requirements shown as ra, rb and rc.) Measurement ends at the lower right of the figure. This is where the engineer ranks the ability of available or soon to be available end items (hardware or software) proposed to provide the capabilities required to support satisfaction of mission functional requirements. In between are subsystem alloca-

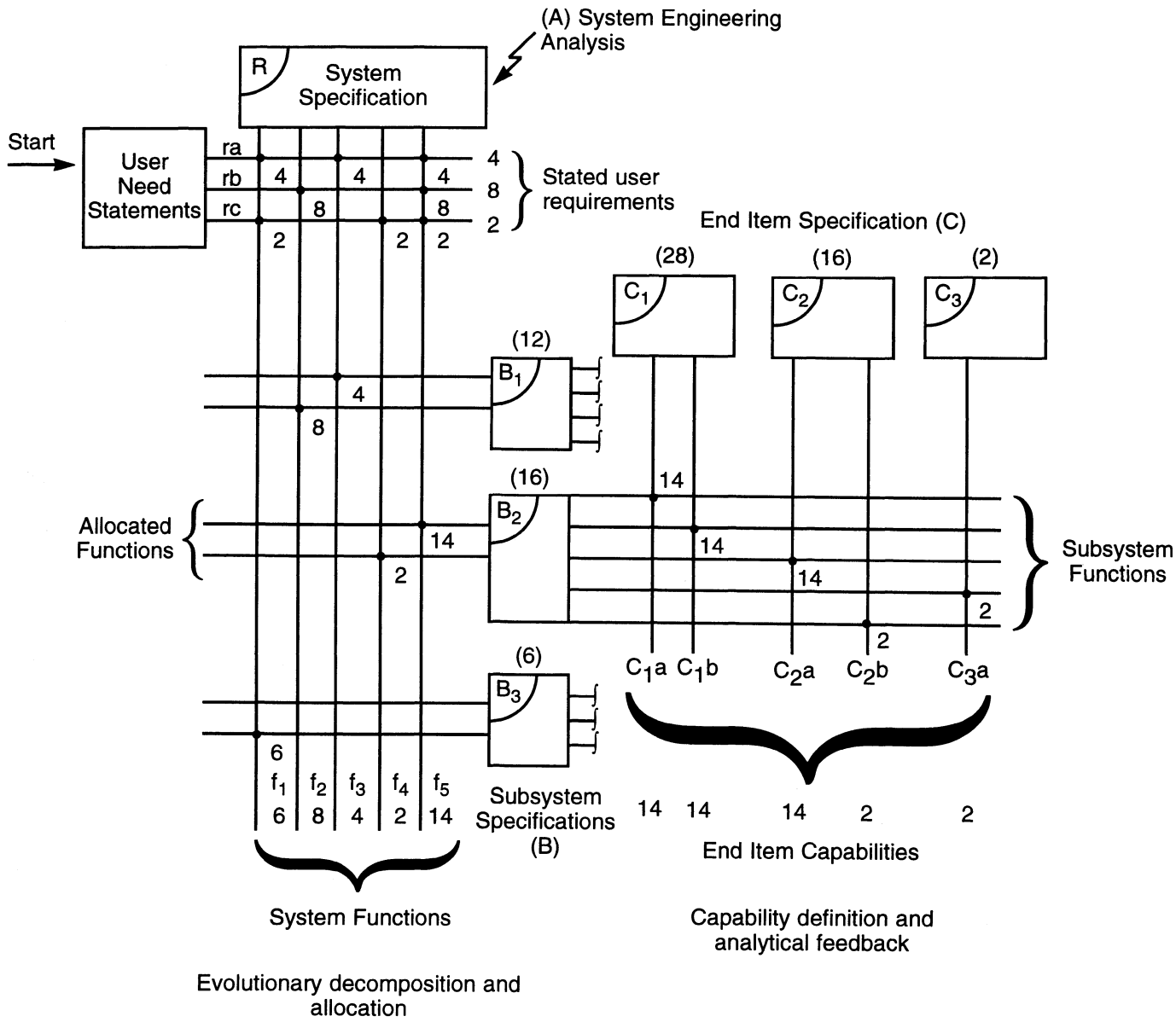

Figure 10. A Typical Candidate System Design Matrix with Value Measurements Annotated.

tion concepts which serve as design control mechanisms. They allocate superior needs downward, to end items intended to serve these needs. Thus, the sum of user needs must be satisfied by the sum of end item capabilities. Management is concerned with the risk that this equation may not be met unless they exercise decisions to assure they will be. Simple step function metrics can effectively point the way.

As shown in the Figure 10 example, the user states a value rating for each defined need, using a scale of 10 for highest value and 1 for lowest value. Intermediate values fall in between. In the example shown requirement (ra) is valued at 4, (rb) at 8 and (rc) at 2.

Based on systems analysis, the engineer has identified five major functions (f_1 through f_5) as needed to satisfy the user requirement. How these functions contribute to user requirement satisfaction are shown by the dots at intersections of the (ra) (rb) and (rc) lines with the vertical function lines.

To assign values to functions, each dot is given the value of its source requirement. To establish a functions value, add up its vertical dot values. Thus:

$f_1 = 6$
$f_2 = 8$
$f_3 = 4$
$f_4 = 2$
$f_5 = 14$

One reason that f_5 is so high could be that its design represents a centralized computation function that contributes to performance of all other functions.

Subsystems of the synthesized design are shown as B_1, B_2 and B_3. Each is allocated the subrequirement to perform all or part of the system functions f_1 through f_5. Again, allocated functional values are added and the relative subsystem values become:

$B_1 = 12$
$B_2 = 16$
$B_3 = 6$

Repeating the process for subsystem decomposition and allocation the end items making up B_2 have the following values:

$C_1 = 28$ where $C_1a = 14$
$C_1b = 14$
$C_2 = 16$ where $C_2a = 14$
$C_2b = 2$
$C_3 = 2$ where $C_3a = 2$

At this point a *relative* value for all synthesized capabilities of a given design concept are established. All originate from stated user needs and values. Notice that the arithmetic method used amplifies the value numerics that flow downwards from the user mission requirements. Based on these value assignments, management attention should emphasize end item C_1 of B_2 over C_2 of B_2. However, until the risk associated with the acquisition and delivered performance of each end item is understood, management attention based on value alone may be misdirected.

While system value analysis is performed "Top Down," system risk analysis is performed from the bottom up. Consider the following axioms.

Axiom 1: Functional and physical performance of systems and subsystems is only limited by the capabilities of their end items.

Axiom 2: Systems and subsystems don't fail. Only their end items do.

Axiom 3: End item risk is a function of its maturity and past performance history. If an end item's capability has not been demonstrated previously *within* its intended operating environment, it is risky.

Axiom 4: Planning granularity is the most critical requirement for early surfacing and assessment of risk. End items must be understood.

Given the above, the author suggests the use of data as shown in Figure 11 as a tool for assigning a Risk Index to the capabilities of end items as synthesized for a new system. Note that the highest end item risk

Risk Index*	Risk Characteristic
10	New Technology Required
7-10	New development: Technology exists, but unproven for this use
5-8	New Design: Similar equipment in use. None directly applicable to this need.
3-6	Design Upgrade: Similar equipment in use: > 40% change required.
2-4	Shelf Modification: < 40% change required.
1-2	Shelf Equipment: COTS: Only changes as required for integration.

**Note: The risk represents your resources expenditure to achieve the user requirement. The more you must invest, the greater your risk of loss.*

Figure 11. *Risk Index.*
End Item Maturity/Characteristics vs. Risk.

characteristic is assigned a 10 while the lowest is assigned a 1 or 2. A Risk Index equal to zero is never used. End items assigned a value of 8 or higher should be considered a candidate for R&D or Pre-Planned Productivity Improvements (P_3I).

Apply the Risk Index data of Figure 11 to the exampled synthesis in Figure 10. Sample results are shown in Figure 12, and are explained as follows.

1. The value of a capability (V) multiplied by its Risk Index (RI) equals the Management Concentration Index (MCI). Management should focus on capabilities that have highest value and risk combinations, i.e., V x RI = MCI.

2. Based on technology status, a Risk Index (RI) is assigned to each capability. (See lower right of figure.)

3. The capability value assignment (V) and (RI) are multiplied to obtain each end item capability (V x RI).

4. Add the capability (V x RI) totals to obtain the end item (V x RI).

5. Add the end items (V x RI) to obtain the subsystem (V x RI).

The resultant data per Figure 12 could be normalized to suggest that management attention for allocation and control of resources for Subsystem B_2 be applied as follows: $C_1 = 43\%$; $C_2 = 54\%$; $C_3 = 3\%$.

The same processes could be applied to Subsystems B1 and B3 end items. Normalizing all data across subsystems would result in relative ranking of all end items to prioritize management concentration across subsystems.

In a similar manner, subsystems could be ranked. By continuing the flow upwards to the system level, a system (V x RI) or MCI metric results. Given that, alternative syntheses can be compared to determine which one has a best change of being "least bad." Also, the detailed metrics data provides an indication of the plausibility of continuing with efforts for detailed design of the least bad alternative.

The reader should understand that the above numerics have only addressed technical needs risk assessment. The process can be expanded to encompass both cost and schedule parametrics as necessary to support more robust management decision making guidance. Economic rather than engineering decision theory provides the basis to such expanded application.

Supporting Tools and Training

On average, no new tools are required to perform what has been described. Most of the arithmetic processes presented can be aided by basic spreadsheets and a simple relational database.

Extending the technical risk assessment process to encompass economic issues requires tools and techniques that are generally unfamiliar to most systems engineers.

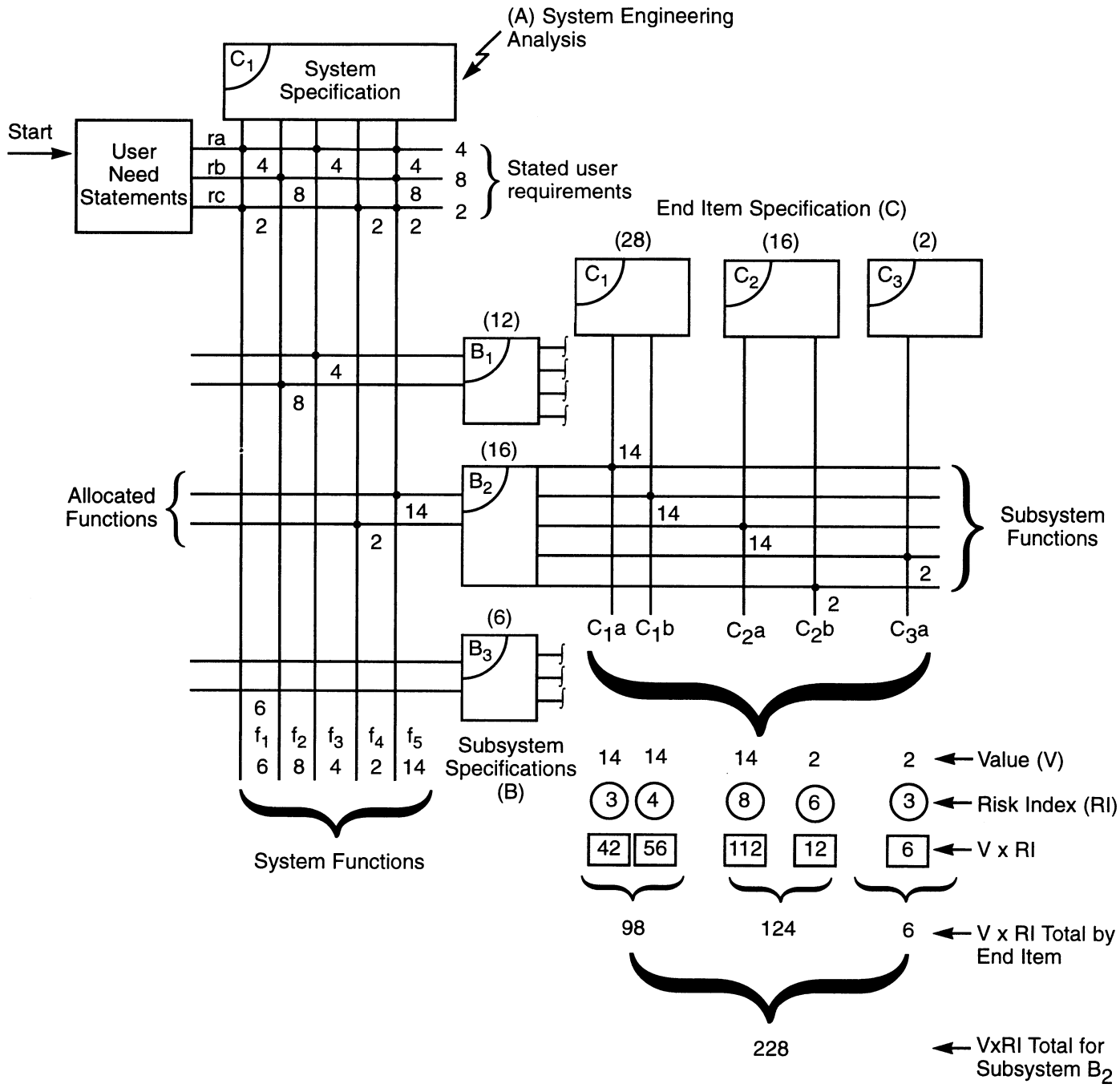

Figure 12. *A Typical Candidate System Design Matrix with Value and Risk Measurements.*

While new tool requirements are not a major issue, the failure or inability by most of us to use existing tools properly is a major issue. Some examples:

Checklists: Dozens exist in the literature that are rarely used. Using them can reduce risk that derives from errors of omission. They will jog the experienced person's memory. For inexperienced people, they stimulate questions and thought. Once an issue is surfaced, resolution will be addressed. Most checklists have been developed because of recurring failures.

Specification Formats: When combined with their descriptive instructions, they are a checklist. Don't modify their content. Tailor your response detail.

Mark unapplicable items as N/A. That is a useful data element to your reviewer.

Data Requirement Lists: Same value as the above, with one additional thought. If an item of data is necessary for decision making and future product/system maintenance or change, produce it. All else should be avoided.

Software Systems: Don't buy the latest because it's there. The cost of training and equipment upgrade can be prohibitive. Stay with what is "least bad," that with lowest risk.

Training is or should be a major concern, but most organizations continue to regard training from viewpoints that do not and cannot satisfy today's business and program management needs. Some specific issues of concern are:

Formal Training: Too many organizations continue to provide training from a "Square Filing" viewpoint. A person must participate in so many classroom hours per year to be considered for advancement. As an alternative, we should be training people to help them make decisions about things they are accountable for. Can it be that we don't know what their accountabilities are or should be? We should test every student in terms of how job performance was improved (risk reduction) because of classroom attendance.

Training Curriculum: Most training continues to teach the basics. While important, these are not sufficient. In today's business environment training must be tailored to fit the student's working needs. Basic theory, coupled with a generic classroom exercise, is usually too vague for timely job application subsequent to course completion. Solution of this problem involves two considerations. First, emphasize training of an Integrated Product Team (IPT) rather than a general student group. Secondly, tailor all training and classroom exercise to definition and management of the IPT's joint responsibilities and accountabilities.

Basic IPT training should emphasize teaching the overall processes of Program and Systems Management as required to meet IPT needs. This basic training should be followed up with specialty courses for the team after unique needs are determined as part of on-the-job training (OJT).

On-the-job Training: Tailored formal training without the provision of OJT has been shown to be ineffective. The classroom exercise should be developed as the OJT start-up exercise. Essentially it should be the "plan for the plan" of the IPT to develop an integrated IPT Project Plan after formal training. This planning effort identifies the need for follow-on specialty training courses. The earlier discussions of this paper outline a "plan for the plan" approach, resulting in a capability for risk management decision making.

Mentor Support: All but absent in most organizations today, mentor support is proving to be a costly issue for many organizations. It represents a form of training that is impossible to formalize for two reasons. When it's needed, it's needed *now*. And, what is needed can only be derived from combining previous experiences. There are two approaches to serve this need: retain some top quality "oldtimers" for this purpose, or, be sure that the selected IPT/OJT instructors can provide the service. A little of both may be the best choice. Consultants are not usually effective in this role.

Industry Lessons Learned

Over the past two years, the processes described in this paper have been applied to several NASA, DoD and commercial projects. In each case, formal training, OJT and mentor support was provided to an IPT. Descriptive experience concerning each project's results are beyond the scope of this paper.[6] However, the following lessons learned are typical of each.

1. A young team can follow the requirements of the NMI-7120 and DoD 5000 series processes with adequate training, OJT and mentor support.

2. You can start process application in the middle of a project.

3. Positive results are achieved within six to 12 weeks of start-up; that is, by a next-scheduled review.

4. At the next-scheduled review, there is more information on the scope of the effort and potential risk identification than by following the "usual" process, for the same or less effort cost.

5. Processes can force identification of risk areas that need to be addressed early on.

6. Specification/product trees can define an analytical baseline for planning, even if initially incorrect.

7. Help is essential in determining appropriate process tailoring.

8. The process holds people accountable and relies on hard data and metrics to determine performance acceptability.

9. The process provides high visibility over issues that affect interfacing projects.

10. The Planning/War Room process provides an effective means for evaluators and management to review work in process rather than waiting for a scheduled review. Reviews are shorter and fewer discrepancies are noted.

11. Planning/War Room data appears more complex and labor intensive than the usual process. It's not!

12. Resource-Loaded Schedule and Life Cycle Costing is not hard. It forces one to think about what is being done versus what should be done, and it surfaces uncertainty for early risk planning.

13. System/concurrent engineering is critical. End users must be involved at start-up.

14. In the beginning, some false starts will be made, but that is part of the learning process.

15. Management must provide proactive support to process implementation.

Failure Lessons Learned

Comparison of the Failure Lessons Learned in the 1980s with those from the 1960s showed them to be basically the same. I concluded that something was missing in how we were performing management.

A new analysis of the very basic requirements underlying the management process revealed that little if any emphasis was given to the management of risk. In general, it was observed that risk management was conducted to fill a square. Risks were only treated seriously when they had already been incurred. Few if any programs addressed predictive risk management.

A subsequent analysis of the Failure Lessons Learned List in the light of predictive risk management objectives revealed that some modest changes to existing practice could yield significant return. Following are some specific changes that have been presented.

1. Risk must be taken in order to advance or improve. The purpose of management is to surface and avoid *unacceptable* risk.

2. Early and in-depth planning is the only tool that can surface risk and thereby avoid reactive risk management. You must plan to a level of granularity that assures all remaining risk is affordable.

3. If remaining risk is not affordable, but the goal is valuable, consider an R&D or P_3I program in place of a Development/Production Program.

4. Management must redefine their decision criteria to choose the alternative that is "least bad" yet still meets overall end user system requirements.

5. Systems engineering must be recognized as the primary discipline that provides a common thread among all program management disciplines.

6. Simple mathematical processes can serve to support most value/risk decisions involved in the trade study analyses.

7. Process application rigor is essential to performance of predictive risk management.

8. Front end planning should be assigned only to experienced and skilled personnel.

9. All personnel should be trained to understand their role in the systems engineering "Big Picture." Such training provides the foundation to the Integrated Process Team's performance as required to carry out the Systems Engineering process. The use of checklists should be a major training thrust.

The results of the two studies have been presented for independent assessments of why so many major government programs are behind schedule, over budget and often deliver products that fall short of required operational capability. The studies were conducted more than 20 years apart, yet the failure reasons were basically the same.

Based on early study results, many changes were made to existing management policy, practice and procedures. Based on the more current study, similar changes are being made.

Comparative review of these new requirements versus the old revealed that the new practices are more clear and streamlined, but that no substantive differences are evident. Thus it appeared questionable that the next 10 or 20 years would produce any more improvements than the last 20 years. Better training did not appear to be the answer *per se*. Since 1970, industry and the government have invested heavily for this purpose. I felt something was still missing from our approach.

A return to basic analysis of fundamental business practice suggested this to be true. It was established that the primary need for management was to avoid risk in the Program Development and Acquisition process. A review of old and new practice through NMI 7120, the DoD 5000 series and other similar policies, showed that risk was addressed poorly, if at all.

This paper described a relatively simple approach towards solution of the risk management problem. The process is founded on the practices of our current systems engineering processes. Field testing has shown that predictive risk management is practical and not too hard to perform by a young team, given some simple checklist tools and minimal training in their use.

References

1. J.S. Gansler, "Program Instability: Causes, Costs and Cures." Defense Acquisition Study, Center for Strategic and International Studies, Georgetown University, March 1, 1986. December 1992 GAO Report Summary. SPF Management Office. Reconfiguration Management Division. GAO/OCG - 93-27 TR.

2. Team organized Sept. 1966 by Colonel Donald H. Heaton, USAF, Assistant for Systems Management, DCS/Systems. Objective: Develop Systems Analysis/Engineering Output Specification. Result: Initial Release of Mil Std 499, Systems Engineering Management, 1967.

3. The initial Program Failure Lessons Learned List was published by E.M. Hahne in the mid-1980s. An updated version was developed in 1989 for incorporation in all training programs presented internationally by E.M. Hahne International.

4. Presented in a paper entitled "Hypothesis with Applications for Total Systems Management," page 137. Published in *A Forum on Systems Management*, School of Business Administration, Temple University, June 1967.

5. Defense System Management College *Systems Engineering Management Guide*, Fort Belvoir, VA 22060-5426. (Several Releases) See also NASA System Engineering Process for Programs and Projects, JSC 49040 Oct 1994. *System Engineering*. Goode & Machal, McGraw-Hill, 1957. *NASA Systems Engineering Handbook*, Sept 1992. (Draft) NASA Headquarters. (Revised June 1995).

6. The reader may contact the following persons for applications project detail.

NASA Projects: Tom Diegleman and Susie Mauzy at NASA JSC, Houston, Texas.

DoD (Navy) Projects: Captain R. Kollmorgan, PMA-299, NAVAIR, Washington, D.C.

Commercial Applications: L&R Nursery Business Analysis: E. Hahne, Plant City, Florida (813) 759-8719.

Hospital Business Analysis: J. Tucker, Houston, Texas (713) 334-4868.

Program Control in NASA: Needs and Opportunities

by a Study Team of the National Academy of Public Administration
William E. Lilly, Project Director

The National Aeronautics and Space Administration (NASA) has successfully managed some of this country's most complex technology and development programs. These successes have included the application of sound program control processes. The impetus for this study arose from the NASA Management Study Group findings that, over time, some program control tools and disciplined procedures and processes had weakened. The Study Group recommended that steps be taken to establish a comprehensive training approach in program management, and, specifically, in program control functions. This study looks at program control processes within NASA currently in use, defines a "model" of program control functions, and provides recommendations on program control training needs and opportunities.

In 1988, NASA Headquarters tasked the National Academy of Public Administration (NAPA) to examine the processes and systems used to by NASA to manage and control program and project activities. Essential elements of a program control system include program development planning and documenting program requirements; integrated scheduling; resources management; configuration management; documentation and data management; establishment of essential baselines; and the conduct of performance reviews. Specifically the NAPA study was designed to include:

- Determination and definition of program control functions as currently practiced in NASA.
- Definition of a model of program control functions for NASA.
- Observations on training of personnel.
- Generation of recommendations for training in program control objectives and processes at the basic, intermediate and advanced levels of project management.

The impetus for a program control aspect of program and project management training and developmental efforts can be traced to a series of findings and recommendations on strengthening program management and control functions, which were derived from the Rogers Commission and the NASA Management Study Group (the Phillips Committee) reports. In reviewing the total function of NASA program management, the Phillips Committee found the weakest area to be that of program planning and control. Committee members commented that over time NASA's use of program control tools and disciplined procedures and processes had weakened. They recommended the reinstitution of a Program Approval Document system and a revitalized hierarchy of program/project status reviews against approved baselines. In addition, the Study Group recommended that steps be taken to develop a comprehensive training approach in program management, specifically in program control functions, that would be based on real experience.

The significance of the program control functions within NASA cannot be overstated. The success of large and complex research and development projects depends on commitment, diligent and disciplined attention to numerous planning, resource and scheduling variables, and the integration and balancing of complex, interrelated activities. Along with the systems engineering function, the program control function is one of the most important activities in successful program/project management. Systematic and disciplined attention to the implica-

tions of variances between planned baselines and actual performance on development projects is critical to taking early remedial action, reducing costly delays and achieving success.

The purpose of this study is to indicate the areas of need as well as provide guidance to the development of training opportunities concerned with program control in support of effective program/project management in NASA. The study could not have been completed without the assistance of NASA employees at field Centers and Headquarters. Their contributions helped the staff to understand the application of project control functions at different Centers. Special thanks are owed to Frank Hoban, Program Manager, NASA Program and Project Management Initiative, who provided the Academy with the environment to pursue the study.

The Program Control Function

In NASA, a project ". . . is a defined, time-limited activity with clearly established objectives and boundary conditions executed to gain knowledge, create a capability, or provide a service." Major space research and development projects in NASA typically include design, development, fabrication, test, and flight operations. A program/project manager is designated responsible for ensuring the performance of all functions necessary for management of the project. The three basic elements of the manager's job are technical performance, cost and schedule. The program/project manager needs to know where the project is at any point in time and to identify and scope problems early. Program/project control, which aids the project manager in this regard, is the total management process of establishing and maintaining program baselines and effectively supporting the project manager in meeting the overall objectives of the project.

The combination of functions of program control is an essential element of the program management process. The establishment of comprehensive performance requirements by systems engineering provides the details and parameters necessary for program control to maintain a comprehensive, adequately explicit and integrated program plan. This plan documents and defines program requirements and establishes the official baselines of program content, scope, configuration, schedule and cost. A comprehensive program control process includes procedures for reporting and reviewing performance against baselines; analyzing and synthesizing program performance; evaluating alternatives; developing disciplined processes for considering, approving, and implementing changes to official baselines; and assuring positive feedback on all directions and decisions. It also provides a uniform system of program documentation and assures clear and consistent communications throughout the program community on program progress, status and issues. The integrated operation of these functions furnishes the means to determine the harmony of actual and planned cost, schedule and performance goals during development and fabrication by verifying whether everything is occurring in accord with baseline plans. The larger point is clear: a program control system requires sustained attention to the system as a totality, rather than as a group of parts.

Ultimate responsibility for the effectiveness of program management control rests with top management. Top management decides upon Agency strategy, policy, and organizational and accountability structure. The control system is a set of major tools and procedures for implementing those decisions and for forming coherent and defensible strategies to cope with changed and changing circumstances. For the most effective program management and control to exist, an *environment* of accountability of organizations and individuals needs to exist at the top of the Agency. It should be clear to the entire Agency how NASA intends to operate and what is expected of all elements. Delegations of authority, definitions of roles and assignments of responsibilities should carry with them the terms of accountability. Disciplined processes for obtaining required feedback on delegations and for measuring and systematically reviewing performance on programs and projects should exist. The pattern of program reviews against approved program baselines should also be established at the top. This can consist of separate reviews or be a part of the general management review process, but a disciplined approach of reviewing status against approved baselines by the

Administrator and/or the Deputy is needed. The strength of such an approach is that it allows Agency leaders to directly, programmatically and effectively keep tabs on the performance and potential pitfalls of programs. This in turn enables top managers to identify and consider the implications of both "inside" factors and "outside" factors, forces and trends which are likely to have an effect on NASA and its missions.

A number of characteristics distinguish NASA research and development projects, including:

- *Uncertainty.* Many of the processes and products to be developed will be undertaken for the first time and all components require the performance of advanced technologies.

- *Long lead times in development and fabrication.* This necessitates concurrent development of elements and subsystems and the fitting of end products together. It requires a high order of advance planning and detailed monitoring and tracking, and increases the need for testing (component testing, subsystem testing and system testing).

- *Size and complexity of projects and the large number and dispersion of participants.*

- *Persistent scrutiny of projects by the public, the Congress and the scientific community.* Not only must the work be done well, the project manager must be prepared to interpret, explain and defend what is being done and why. Practices and standards for public projects far exceed typical industry standards.

Against this background, it is important to keep in mind that good program management is a matter of balancing different internal and external factors so that performance is maximized over the longer term. Program control interventions, if used correctly, help to maintain this balance.

Major Functions of Program/Project Control

The basic control functions for development projects are planning, configuration management, scheduling, resource management and data management. In some cases, procurement activities and other business management activities may become part of the control function, as well as logistics and separate activities for program analysis, management information and program reviews. The combination of activities included depends upon the size and complexity of the program or project, the existing support structure and the preferences of the Centers and the individual managers. Regardless of the individual functions, more than anything else in program control, it is important for the personnel to see and comprehend the totality of the job to be done and to thoroughly understand the interrelationships and interfaces of the subsystems and systems, as well as the organizations and participants in the project. Another important element in structuring and carrying out program control functions is uncertainty and the inability to completely eliminate it. Uncertainty should be specifically considered in program planning, scheduling and resource planning.

Program Plans and Requirements

The development plan is the basic plan for execution of the program or project. It is the top-level requirements document and the top-level implementation plan. It is the single authoritative summary document that sets forth the manner in which the objectives shall be accomplished. It defines the program organization, responsibilities, requirements, resources and time phasing of the major actions required.

Program planning sets forth the development requirements needed to establish and maintain an integrated planning baseline of what is to be done, how it is to be done and when it is to be done. It is not a one-time process, since the development of detailed performance requirements are not estab-

lished at one point in time. In addition to the technical requirements, detailed management and mission requirements should be established. It is a continuing process of laying out and ensuring a unified effort in implementing the program, adjusting to changing conditions, maintaining the program or project development plan, and integrating ongoing technical requirements. Although planning steps are laid out in a linear sequential manner, the process is iterative.

The technical requirements establish the work packages. The development of the project work breakdown structure (WBS), consistent with the Agency coding structure, may also occur in conjunction with the planning function or it may be part of one of the other functions. On NASA development projects the WBS will normally be end-item oriented rather than discipline oriented.

Resources Management

Resources management includes the establishment, monitoring and maintenance of obligation and cost as well as the manpower baselines. Manpower constitutes the vast majority of development costs, and knowledge of status and trends are extremely important. The reporting structure for cost should be established and maintained with an emphasis on cost phasing and cost to completion. Reporting systems and selection of report items should be designed to raise questions, not to answer them; the implications are important, not the absolute value recorded. The absolute value is useful only for historical and legal purposes.

The planning of reportable items is usually achieved through use of the Work Breakdown Structure accounts. The structure and analysis of report implications should be correlated closely with schedule and technical performance. The recording and reporting of cost alone has little or no value as related to performance implications in the future; one of the main purposes of resource and schedule analysis is to recognize implications and to reduce management surprises. This allows for identification and evaluation of "what ifs" and alternatives. The initial and subsequent cost estimates must recognize and quantify risks and uncertainties and provide reserves and allowances for program changes. The requirement for uncertainties and risk is as vital to project success as any other cost element. Having contingency funds available and using them judicially are integral parts of successful research and development efforts.

If the contractor reporting structure attempts to closely parallel schedule and cost reporting milestones, extreme care should be taken that it is not based on the assumption of equal value milestone performance. This type of system can easily lead to some misleading assessments. If such a system is used, program changes can completely disrupt performance reporting and require installation of a new structure of report accounts and a long hiatus in reporting. To base a system on an assumption of continued program equilibrium would be a mistake—uncertainty is much more likely to be the norm.

Configuration Management

The purpose of configuration management is to provide a disciplined systems approach for the control of the requirements and configuration (normally established by systems engineering) of hardware and software to be developed and the process for change consideration. The function basically consists of four distinct practices:

- *Configuration Identification*—The definition and establishment of the total technical requirements (performance and functional) and the detailed configuration definition and documentation. Configuration identification is usually established incrementally as design and development proceed.

- *Configuration Control*—The formal process used to establish and control changes to the configuration baseline. This control is effected through a hierarchy of formal configuration control boards established at the different levels of hardware and software.

- *Configuration Accounting*—Performance of this function "defines" the exact baseline on a continuing basis and provides a clear audit trail from the authorization of changes into the affected documentation. It should provide the single authoritative source for baseline definition.

- *Configuration Verification*—Ensures that the baseline configuration requirements have been incorporated into contracts and are fabricated and tested accordingly.

Documentation Management

Documentation management establishes data policies and responsibilities and procedures for identifying, planning, selecting and scheduling a large volume of data. The data management system ensures continual management review of NASA-generated and contractually required documents, eliminates any non-essential requirements, and assures only the minimum amount of documentation necessary for effective program management. The principal intention of the system should be to define the information required, justify its need, and control the information after it is generated.

Schedule Management

This function provides for the development and maintenance of the master schedule and the detailed, interrelated schedules covering the total program or project to completion. It involves the requirement to define the schedule format, content and symbols used. A critical component of the function is selecting the key progress indices for measuring performance and indicating potential problems. A system of reports, reviews and action feedback needs to be provided. Working closely with resources management, the analysts must evaluate performance, synthesize various inputs and implications, and generate and evaluate alternatives. Plans and schedules should provide for uncertainty and the unknown.

The integrity, reliability and discipline of the reporting system are essential. NASA should continually assure the end-to-end integrity of program control data from its source in subcontractors to prime contractors and subsequent levels of NASA. The importance of early problem recognition cannot be overemphasized: the ideal control system detects potential deviations before they become actual ones. The costliest aspect of a development program is time. Slippages in a program schedule are extremely expensive. A permanent record of all changes and slippages should be kept to allow trend analyses.

The primary steps of management accountability—establishing objectives and baselines, measuring performance against baselines, analyzing and evaluating performance and alternatives, assigning action or direction, and ensuring action feedback—are applicable to the management of almost any activity. Some aspects of control functions such as planning, scheduling activities, and managing resources are also applicable in some degree on all NASA work, including applied research and technology, science tasks, and institutional management. However, the collection and staffing of the full array of project control functions are not necessarily appropriate for all activities within NASA. The style of management and types of controls require tailoring to the particular objectives and problems of the individual activities.

How program control functions are grouped organizationally is a consequence of a number of factors. Nevertheless, it is clear that all of the functions and their outputs need to be integrated. On a small project, a project manager could possibly perform the functions and integrate the data output. On relatively large or complex development projects or programs, it is the opinion of the Academy team that management control and synthesis of program element progress and performance are enhanced by grouping the functions. A model that lays out program control functions suitable for most large and complex development projects is shown in Figure 13. This model assumes that program analysis is an inherent part of the functions shown. As a matter of preference, however, program analysis can be handled as a self-contained function.

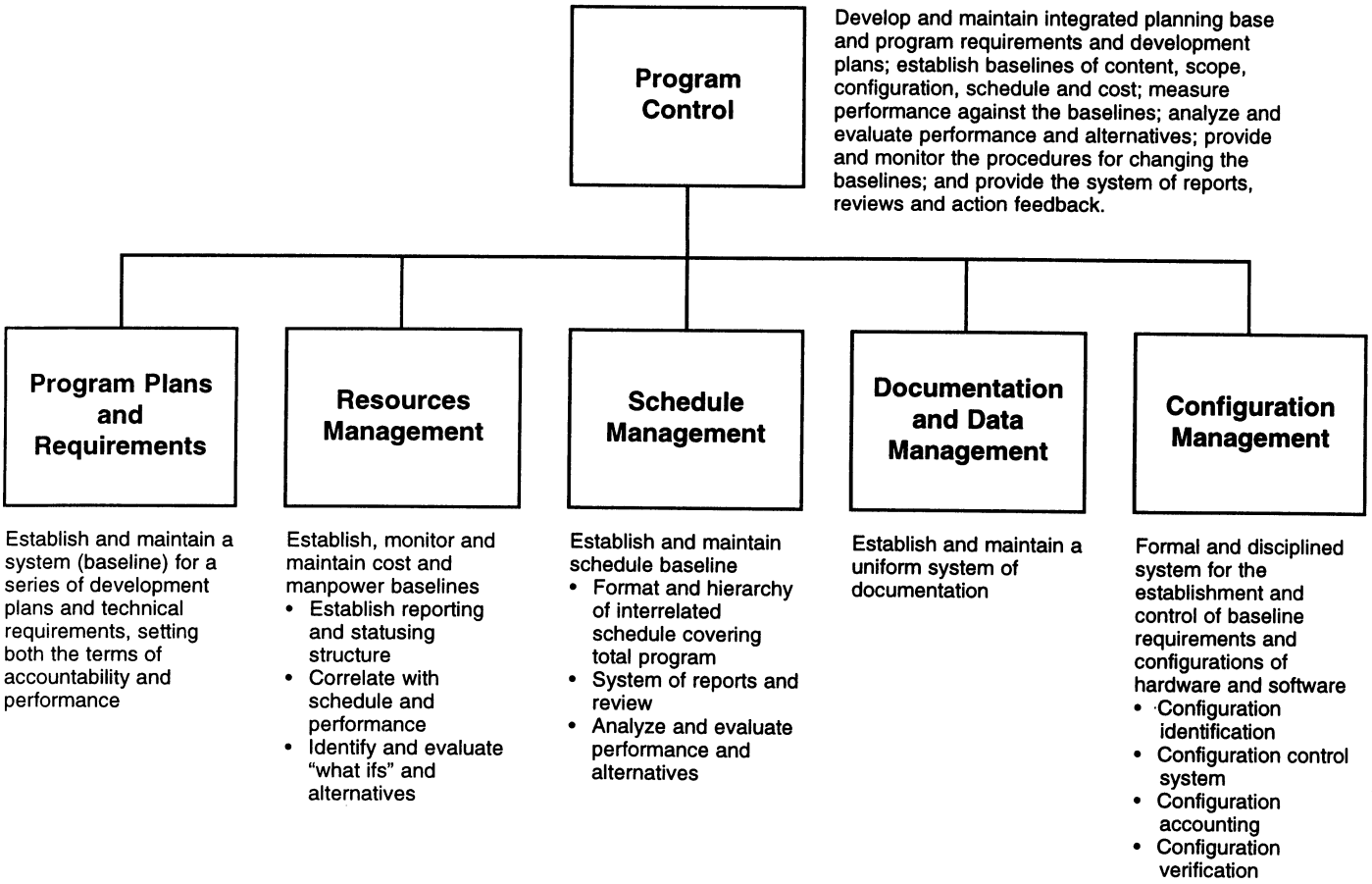

Figure 13. Program Control Functions.

Current Status of Program Control in NASA

As part of this study, the Academy made an effort to ascertain the current status and health of program/project control functions and processes within NASA. Interviews and discussions were held in both Headquarters and Centers with Center Directors, directors of flight projects, program managers and personnel who play roles in program control functions. Discussions were also held with previous NASA program directors, some aerospace industry officials and support contractors supplying management services to NASA.

In Headquarters, the reinstitution of the Program Approval Document (PAD) System has not moved swiftly. Dale Myers, Deputy Administrator in 1987, sent a letter with instructions for preparation of PADs in June 1987. On March 14, 1989, a management instruction (NMI 7121.5) was issued, which required the specific development of 23 separate PADs with provisions for adding or deleting projects in the future. Approximately eight have been prepared and approved. The Deputy Administrator is holding meetings with program offices in an attempt to tailor the format, content and level of detail of the document, and to define the management processes to fit the desired methods of operation in an orderly and efficient fashion.

Since early in its history, NASA documented its management policies and principles of project management as well as instructions on planning and approving major research and development projects. These instructions were canceled in the mid-1980s when the PAD system was eliminated. Efforts have apparently been made to reinitiate or replace some of the canceled documents, but at this point, it has not been accomplished. An understanding of how the Agency intends to operate and what is expected in

terms of project management approaches and techniques does not currently exist within the Agency. A common concern among senior managers at the Centers was the apparent lack of appreciation of the usefulness of such policy statements on the Agency's operation.

General management status reviews continue to be held at Headquarters. The current review system provides for three separate meetings—one for Space Transportation and Space Station, another for all other programs and projects, and a third for institutional activities. According to some attendees, these reviews could not be characterized as disciplined reviews of progress against established baseline milestones and goals. However, program offices participating in these reviews do characterize the status and problems of projects.

The organization and performance of program/project control functions within the program offices and the development Centers have not materially changed or improved since the Management Study Group findings in 1986 and 1988. There have been some changes in personnel and in the methods of performing the functions. One trend appears to be an increasing use of support contractors to provide some project control functions including scheduling, configuration management, data management, and elements of financial operations. The degree of contractor use varies among the Centers but the trend [in 1989] appeared to be growing throughout NASA in all functions and activities in addition to program control. The impetus for contracting out functions was generally attributed to the need for supplementing the limited availability of civil servants. Discussion with one NASA support contractor, however, confirmed that contractors also had the same difficulties in finding skilled personnel in program control disciplines and were faced with a problem of how to train their people and how to sharpen their skills.

In reviewing the list of program control functions with NASA Center personnel, the reviewers found no disagreement that all of the program control functions were required and should be performed on development projects. Only two organizations had essentially all of the program control functions operating together in one group. At Goddard Space Flight Center the functions were all within the Project Director's office reporting to the Deputy Director for resources. Scheduling, configuration management and data management functions were performed by a support contractor and were under civil service monitors responsible for the functions. A discrete function for project planning was not within the project offices. The Space Station office at Johnson Space Center (JSC) is the other organization having a fairly complete grouping of functions under the program control division. In the other program offices at JSC, program control functions are not integrated in one group but are being performed in one way or another in various organizations.

At the Lewis Research Center, steps have been taken in the Space Station project to integrate resource management, scheduling, and configuration management in a program control organization. At the Marshall Space Flight Center, there is a fairly consistent pattern of combining scheduling and resources management in a single organization in the project offices. Except for the cases noted above, the remainder of the NASA Centers and the Headquarters program offices do not have organizationally integrated program control functions. The functions are either not performed, are scattered in various subgroups, or are done informally.

An Agency cost estimate is always prepared on new development projects prior to evaluation and selection of contractors. However, there does not appear to be a uniform procedure for recycling and validating new estimates after selecting the development contractor. Rather, the contractor's negotiated bid generally becomes the baseline against which any changes are incrementally made. This is true even though the contractor's estimate is usually considerably lower than the government's estimate. The rationale for the government's higher estimate in most cases is quickly forgotten. Credibility begins to be attached to the contractor's estimate, which is neither justified nor borne out by history. Since it takes some time for deficiencies to become apparent, they generally come as surprises and result in more costly schedule slippages. In too many cases a large pro-

portion of the time available to the staff of project resource and schedule management groups is spent on finding near-term funding solutions to these "surprises."

As a general observation, too little effort is spent by both resource and schedule groups in analyzing potential problems or risks and in selecting critical reportable milestones that could give some advance notice on the probabilities of problems. Close correlations of reportable schedule and cost performance data is desirable, but the critical indices of performance are not always precisely aligned with a hardware-driven work breakdown structure.

There is an apparent lack of emphasis on laying out logic diagrams or networks on projects, particularly prior to selecting schedule and resource reporting items. The researchers know of no better way to comprehend interrelationships and interfaces of efforts on components, subsystems and systems. When these networks are laid out in time sequence, critical schedule and resource reporting indices become much more apparent and risks are easier to assess. The special virtue of logic diagrams is that they allow planners to incorporate time, resources, and technology into strategies, thus linking temporal horizons with contextual changes.

As a generalization, reviews at the Centers appear to be more structured toward the assessment of project performance than they are at Headquarters. Many of the reviews at the contractor plants, however, seem to be primarily scheduled visits with fixed agendas, and with large groups spending great amounts of time looking a viewgraphs. It was not apparent how often site visits by project control personnel were made for the purpose of assessing performance and verifying the integrity of reported data at its source. Regardless of how scientific the approach or how sophisticated the management system and tools are, there is no substitute for a simple visual assessment. Coordination of those supplying performance data is essential.

Training

Traditionally within NASA, program control personnel have gained skills and knowledge through firsthand experience and from their experienced supervisors. Immersing themselves in program/project research and development activities is still the most common way of gaining project management knowledge. Forming mentor relationships—working with a person who can provide counseling, guidance and advice—is also used to gain the skills and credentials of program control. However, experienced program control personnel are becoming fewer within NASA. According to interviewees at the Goddard Space Flight Center, in the past, many program control staff first studied operations research or industrial engineering, then acquired on-the-job skills and subsequently passed on lessons learned by various means. Rarely did program control staff receive formal training related to specific functions such as the establishment and maintenance of a configuration control or scheduling system.

NASA and contractors currently face difficult problems in recruiting experienced program control staff due to a number of reasons, from limited career paths to elimination of industrial engineering disciplines at many major universities. As mentioned earlier, in response to recommendations from the Phillips Committee, NASA decided to formalize efforts to help in the development and training of managers, including program control personnel. Formal training will be provided in such areas as resources management, schedule management, and configuration management. Analytical skills and the philosophical and logical foundations of program control, however, cannot be learned just by attending classes. They require application and the achievement of an end result as well. Self organization, program interest, ability to coordinate individuals and data, a questioning attitude, resiliency, sensitivity, imagination, and practicability are other nonemperical qualities that are valuable in program control work, but are beyond the realm of classrooms. In sum, formal

courses can only complement, not replace, hands-on experience and the inherent qualities of key personnel. This is because analytical skills are, to a large extent, embodied in people and institutions, not just in physical objects like computers.

It is anticipated that formal development training will be provided by both civil servants and contractors. There will be a core curriculum which will be designed to serve business, technical and program and project management staff as well as a series of detailed courses designed for people who will be performing functions in specific areas. It is expected that the importance of integration of the program control functions and synthesis of data, personal responsibility and accountability, and disciplined procedures will be stressed. How the courses are structured and how consistent they are with the past experiences and needs of trainees will have a strong bearing on the prospects for success of the training efforts. Equally important, however, will be the support of top management at the Centers and Headquarters. Their interest will have a serious impact on the outcome of the project. If top management is sensitive to and supportive of the need for training and displays a strong commitment to the training program, the probability of success increases tremendously. Perhaps more significant is that if top management is involved and accurately communicates its involvement, the entire effort will be perceived as credible and worthwhile.

Recommendations and Observations

NASA has successfully managed some of this country's most complex technology and development programs. These successes have included the application of sound program control processes. The basic concepts of program management and program control have not changed, although computerized systems have the capability to enhance the quality and effectiveness of documentation, communications, evaluation tools and support systems. Much of the new capability of tools and support systems have been incorporated in NASA, but over time NASA's use of the basic management control disciplines has weakened. Strengthening program control involves the improvement and utilization of certain disciplines, the existence of a conducive Agency environment and an understanding throughout the Agency of the leadership's policy and objectives. The following recommendations are oriented toward improvements in program control processes and practices.

Enhancement of Agency Environment for Effective Program Control

This study concludes that is would be extremely helpful for NASA personnel to be aware of the importance attached to program control functions be the Office of the Administrator. This awareness can result in the reinvigoration of program management disciplines throughout the Agency. An effective method of informing Agency personnel and contractors would be through appropriate issuances setting forth Agency intentions for conducting its business, expectations of all elements and policies and procedures for program/project approvals, assignment of responsibilities and the explicit accountabilities of organizations and individuals. The following actions would be helpful:

- Issuance of Agency policies and processes for the approval and conduct of projects, the assignment of responsibilities and the terms of accountability of organizations and personnel.

- Establishment of regular performance reviews against approved baselines of development plans, schedules and cost appropriate for this level of management.

- Facilitation of rapid communications to and from all NASA elements regarding program control functions, tasks and feedback on action assignments.

Development of Training Activities for Program Control

The primary emphasis should be on understanding the role of program control functions in relation to and in context with the program/project manager and other groups and functions of the program office, particularly systems engineering. Systems engineering includes those activities required to transform mis-

sion needs into a comprehensive and definitive set of systems performance requirements. It also includes the activities needed to define a preferred systems configuration and its detailed performance requirements. The results of these activities set much of the baseline detail for program control functions including program plans and configuration management and parameters for schedule and cost management.

Program control is the total management process of establishing and maintaining the official development plans and program baselines in a manner which maximizes success in meeting a program's overall objectives. Although the following topics are not all-inclusive, some suggested program control training activities are (more detail shown in the Appendix):

1. Philosophy, content and context of effective program/project control.

2. Planning and documentation of requirements.

3. Content and processes of configuration management.

4. Logic diagrams or networks.

5. The scheduling function and process.

6. Basics of primary methods of cost estimating.

7. Resource management and control.

8. Presentation of data.

The most important element in evaluating and assessing the status of a project and providing program control is the understanding of the objectives, technical content, development approach, and the interrelationships and interfaces involved in its development. Throughout this report, the Academy researchers have taken the position that program control is not a collection of the separate functions that comprise it, but that it is an understanding of the plans and approach and the interrelationships of the functions and performance of configuration, schedule and resource management.

The most meaningful implications from performance data cannot be drawn from the independent functions, but rather, only when the data are integrated. For this reason we have emphasized the integrated understanding of the roles rather than skills and tools. Tools and skills can be very important but only when one understands their limitations as well as advantages and knows when they can be usefully applied. In this context, emphasis on skill training is important with regard to particular tasks such as logic networks, a means of focusing data for the maximum information output and the presentation of interrelated performance data.

Observations

Until conducting this study it had not been apparent to the researchers the degree to which NASA has become staffed with support contractors as opposed to career civil servants. Onsite contractors appear to now exceed civil servants. The impact of this condition potentially can have serious consequences on NASA's program management and control capabilities.

As stated earlier in this report, NASA projects push technology beyond the current state of the art. Traditionally NASA has had the civil service and fabrication capability in its Centers to conduct the appropriate depth of studies, examine objectives and missions, develop the technical concepts for accomplishing missions, determine feasibility, and provide the conceptual design. If it was decided to budget and contract for the design and development of a project, the inhouse capability existed to manage, technically monitor, evaluate and direct such contracted work. If technical problems arose at the contractors' plants, the capability existed to help provide solutions and correct the problems. Some of the major objectives of program/project control are the early identification of potential problems, avoidance of surprises, provision of workarounds, and the ability to obtain help in providing solutions. This precept of the importance of early problem identification assumes the availability of the technical capability to participate in solutions to such problems.

Funding pressures on projects have continued since the early 1970s, and less funding allowance for the contingencies of the "unknown" has been the result. As surprises occur and additional funds are not available, schedules usually become the variable on which short-term solutions to fiscal year funding problems are based. The obvious result is an increased run-out on total cost and shrinking credibility.

With the increasing contractor staffing, NASA engineers have less and less "hands on" experience. Service contractors are increasingly being used at Centers to perform project control functions such as scheduling, configuration management and elements of financial management. In effect, this is using contractors to monitor the performance of prime development contractors. This situation is leading some NASA managers to question the Agency's continuing ability to manage contracted projects and control costs.

NASA remains responsible for the performance of the work, but with a reduction in capability to influence and correct performance. How well the Agency meets demands relating to program performance has a major effect on its ability to effectively run programs.

Appendix
Suggested Training Activities

The following topics are not inclusive in the sense that they cover all items.

1. Philosophy, content and context of effective program/project control.

   - What is meant by "control"?
   - An explanation of how the main functions relate to each other.
   - Importance of understanding the totality of the project.
   - Importance of understanding interrelationship of elements and interfaces.
   - Importance of ensuring integrity of reported data to source level.
   - Importance of concentrating on the implications of reported data rather than on the factual data.
   - Anticipation of development difficulties and changes in external environment.
   - Continual assessments of "what ifs."
   - Importance of a questioning approach.
   - Requirement for disciplined processes and positive monitoring.
   - Barriers to effective program control.

2. Planning and documentation of requirements.

   - Importance of maintaining development plan baseline.
   - The necessity of a series of subsidiary plans, actions and schedules.
   - Documentation of requirements.
   - Technical and program reviews and results.

3. Content and processes of configuration management.

   - Importance of early development and documentation of configuration requirements and preparation of a configuration maintenance plan.
   - The systematic approach of defining and documenting the detailed configuration. Understanding of the need for incremental identification as design and development proceed.
   - The significance of positive control of changes to configuration. Importance of evaluating

impact of individual proposed changes on operational capability and total cost.

- Importance of clear audit trail of changes and maintenance of the exact baseline.

- Necessity for effective verification that baseline configuration has been implemented.

4. Logic diagrams or networks.

   - Understanding how to develop networks.

   - Importance for understanding the total job and the interrelationship of the components of the job.

   - Relevance of networks to effective analysis and synthesis of performance data.

5. The scheduling function and process.

   - Critical importance of identifying known and potential development risks.

   - Planning for the unknown.

   - Understanding interrelationships and interfaces of development processes and organizations.

   - Importance of selecting the critical indicators of progress or problems—the most important scheduling function.

   - Identification of indicators as far "upstream" as possible from critical progress points.

   - The danger of becoming mesmerized with systems. The need to understand weaknesses better than positive elements and to keep systems as simple as possible.

   - The amount of time required for administrative and decision processes. This time requirement cannot be overlooked.

   - The costliest aspect of a R&D project is time. Slippages are extremely expensive.

   - Emphasis on early problem recognition.

   - Importance of having only authenticated and dated schedules.

   - Maintenance of permanent record of all changes and documentation of slippages.

6. Basics of primary methods of cost estimating.

   - Understanding of concepts, processes, when each is most useful, advantages and disadvantages: parametric cost estimating, analogy estimates, engineering estimates ("grassroots," "bottom-up") and expert opinion or Delphi techniques.

   - Dangers of accepting contractor's negotiated cost estimate without complete reverification.

   - Importance of quantifying risks.

   - Importance of provision for and use of reserves.

   - Risks involved in using cost goals as incentives in cost estimating and the use of "design to cost" concepts on R&D operational systems.

7. Resource management and control.

   - Establishment of a cost reporting system.

   - Importance of correlating manpower reports on R&D projects.

   - Importance of integrating cost data with schedule performance.

   - Verification of end-to-end integrity of data reported.

   - Understanding the contract structure, and nuances of differences in definitions and accumulation processes of prime and subcontractors.

- Importance of onsite verification of data and calibration of personnel supplying data.
- Reporting of data should raise questions, not answer them.
- Trend analyses.
- Emphasis on run-out and cost to completion.
- Importance of continual work on "what ifs."

8. Presentation of data.

- Determination of objective or purposes of presentation: What is the message or information to impart?
- Determination of desired outcomes.
- Avoidance of reams of cost, schedule or engineering data. The need to focus presentations and use only data which contribute to understanding context, significance and implications of information. Detail can overwhelm strategic choices.
- Factual data may or may not be significant to future actions or decisions even though they may be important for legal or audit purposes.
- The need to sequence messages in a priority, logical or temporal order. The use of unambiguous language.

Resources for NASA Managers

by Dr. William M. Lawbaugh

Book Reviews

Managing in a Time of Great Change
by Peter F. Drucker
Dalton: New York, 1995.

In 1946, Peter Drucker redefined employees as resources instead of expense or cost items in *Concept of a Corporation*. Post-war Japanese reformers adopted him as their business guru and guide, and *The Practice of Management* (1954) took Europe by storm. Due largely to his influence, institutions began to re-organize around the flow of things to the flow of money and now to the flow of information.

Like previous Drucker books such as *The Frontiers of Management* (1986) and *Managing for the Future* (1992), this book was "pre-tested" chapter by chapter in magazines such as *The Atlantic Monthly* and *Harvard Business Review*. It lacks flow and continuity, but the insights are certainly worth pondering.

For example, he says: "The current emphasis on re-engineering is from the flow of things to the flow of information. The computer is merely a tool in the process." Post-capitalist executives are knowledge-workers who must figure out what information is needed and, "most importantly, what they do not need."

Among his "five deadly business sins," Drucker includes "feeding problems and starving opportunities." He calls problem solving mere "damage containment" and says only opportunities will produce measured growth and tangible results. He has six rules for U.S. Presidents, including: "Concentrate, don't splinter yourself," but recent all-out efforts to achieve universal health care or gay rights in the military seem to have fizzled.

From his perch in academia (Claremont Graduate School), Drucker can speculate on "The End of Japan, Inc.?" and "really" reinventing government, but management, not political science, is his forte. He does admit, however, that two answers have been wrong this century in dealing with social need. The first answer was to let government solve social problems, but "society is becoming sicker rather than healthier." The second wrong answer was formulated in his 1942 book *The Future of Industrial Man*, that the corporation became a worker's "community" from cradle to grave. However, "entitlements" and "fringe benefits" are not his solution today. Rather, echoing his *Managing the NonProfit Organization*, written a half-century later, Drucker proposes: "It profits us to strengthen nonprofits" such as AA, parochial schools and private relief agencies to address our social ills most effectively.

Peter Drucker is on more solid ground writing about management. In team-building, he clearly prefers what could be called "basketball" where few players mold and work together quickly, such as at GM's Saturn Division. Detroit and most American industries were built on the sluggish, inflexible "baseball" team model, while Japan was more like "football" where the boss or coach still called all the plays.

As for the "Change" in the title, Drucker says, "For managers, the dynamics of knowledge impose one clear imperative: every organization has to build the management of change into its very structure." He suggest three ways to do this: continuous improvement of product, self or service; exploitation of successful knowledge (new products, selves or services); and organized, systematic innovation—every organization's necessary core competence.

Education and School are at the epicenter of Drucker's new information-based society for knowledge workers. Yet, he says, "Management, in most business schools, is still taught as a bundle of techniques," such as budgeting and planning. As important as there are, Drucker says, it is far more impor-

tant in this age to develop "competencies," like working under pressure, learning how to learn, knowing what to know, and being able to gather organize and present useful information. When Drucker says "we need to measure, not count," he means moving away from traditional cost accounting to looking at value, quality and investment. "The key is not 'cost' but 'cost-effectiveness.'"

In this competency-based education environment, the knowledge worker (a term coined by Drucker in his 1959 book *The Landmarks of Tomorrow*) requires "a habit of continuous learning." Thus, for Drucker at least, management is one of the liberal arts instead of a social science. It is not "experience-based" but rather "learning-based." Core competencies lead to "being able to do something others cannot do at all or find difficult to do even poorly," which should be enough to carry us to the end of his predicted social transformation in 2010 or 2020.

Multimedia for Decision Makers
by Jeff Burger
Reading, MA: Addison-Wesley, 1995.

Managers and executives often wonder how their communications can reach more people and become more effective. "Multimedia" is the suggested answer, but the decision maker needs to know how to integrate the various media (text, graphics, audio, video, interactivity) in the office and make it cost-effective. That's where Jeff Burger's new book comes in.

Multimedia for Decision Makers is an overview of multimedia applications for managers, not technicians. It is conceptual rather than technical, and it affords a basic grasp of the possibilities and benefits of using more than one medium in presentations, trade shows, direct marketing, information management, training and teleconferencing.

"Interactivity" is the key in space-age communications, according to Burger. It is often noted that we grasp 20 percent by hearing, 40 percent by seeing or reading, and a whopping 80 percent by doing. Interactive multimedia enhance our communications immensely, especially through the Internet and CD ROM technologies.

Just as the Internet was at first a Cold War effort to sustain bomb-proof communication, laser discs and CD-ROMs were first used in military training, says Burger, such as interactive learning for nuclear submarine management, in place of bulky service manuals. Electronic kiosks incorporating graphics, sound, modem transmission and vending are being developed in California for everything from bill payment and driver's license renewal to state lotteries. Space travel is made much more exciting (and educational?) through interactive multimedia simulators. Some call it "edutainment."

Edutainment could soon involve videos and music on demand, "smart" games, computer-assisted research, interactive fiction adventures and even home based shopping comparison, depending on passage and implementation of new telecommunication legislation. As Burger points out, "throughput is only as efficient as that of the smallest artery." In other words, one burst of interactive multimedia collapses when the fiber-optic cable feeds into a mere copper line on your street.

What Burger does not point out is that much of this "new" technology has been around for a long time, but there has been little or no consumer demand for it. Bell Labs, for example, introduced the Videophone in the era of the Kelvinator, but consumers preferred better food storage over showing up on the telephone. The first facsimile transmission was sent from Lyons to Paris in 1865, but no one seemed to need it until recently. The USPS has abandoned its plan for user-friendly postal kiosks. We still do not need or want the Videophone, apparently.

Nevertheless, Burger's books presents at least a dozen alternatives to the typical viewgraph presentation, all of them feasible and economical.

Silicon Snake Oil
by Clifford Stoll
New York: Doubleday, 1995

Subtitled "Second Thoughts on the Information Highway," this book fills a void: "there's damned little critical discussion of the implications of an online world." Is the Internet oversold? Do networks deliver on education? Progress? Is this the ultimate revenge of the nerds?

Clifford Stoll is a planetary astronomer by training who is offended by colorized and computer-enhanced images of outer space sent online by NASA, for example. He finds them fraudulent, "since infrared images have no color," he says. He also finds computers in the classroom "expensive and semi-reliable," providing only flat, black-and-white, one-dimensional info. They are, too him, as useless as television. Books (like his?) do a better job. "Learning is not easy," he declares, excoriating "edutainment" devices.

Multimedia? "Wrong, since there's only one medium employed: the computer."

Interactive? Nope, all the outcomes are, of course, preprogrammed. "The experience is about as interactive as a candy machine."

Eye-hand coordination, at least? A neighborhood game of soccer is far healthier, and a box of crayons and a big sheet of paper far more expressive.

Educational? Researchers and creative folks publish their best stuff in journals, and the gold online is hard to distinguish from all the dross. Besides, CNN will keep you better informed than the Internet.

A virtual community? Yes, but how impoverished without a church, a cafe, a theatre, a museum or even a corner bar. "And no birds sing," he adds. No children, no hearth, no warmth.

Great jobs? "Well, no. Computer skills no longer guarantee employment," he says. "Programming jobs are easily exported," like hardware manufacturing and software piracy.

Telecommuting? Talk about turning home with all its distractions, into a prison, he asserts. And tell that to your dentist or auto mechanic.

Email? Stoll finds faxes are cheaper, faster, better—and more reliable, secure and universal, and with no junk. Real (snail) mail is more personal and warm. Telephone, too. He's met dozens of teenage computer wizards who have never written a thank-you letter.

Clifford Stoll is not your average troglodyte, Luddite or computer dubunker. He was an Arpanet user long before we had an Info Highway, and his first book, *The Cuckoo's Egg*, is all about how he nabbed a German spy ring on the Internet, which he now calls "that great digital dumpster" of disconnected data.

The biggest loser in the online culture is the library as we know it—an organized set of books and periodicals. Yet, libraries are strapped because they have had to invest in computer systems and software that are soon obsolete. (Look at their earlier investments in punch-card and paper-tape readers, reel-to reel tapes, 78 rpm disks, 8 mm. movies, 8-track tapes, and new books on tape, CD-ROMs, ASCII files, FORTRAN, Basic, Word 2.3, etc.). Their hours are shorter but wisdom is diminished.

Stoll distinguishes between wisdom and data. Online you can find plenty of data (like drinking from a firehose), little usable information, less knowledge, and hardly any wisdom, since nearly nothing before 1980 is digitized. Besides, who would really prefer to read a book (or periodical) off an LCD or CRT instead of real paper?

The Leadership Challenge (2nd. edition)
by James M. Kouzes and Barry Z. Posner
San Francisco: Jossey-Bass, 1995.

Tom Peters, in the Foreword to the second edition of this thick (400-plus pages) new book, says: "Management is mostly about 'to do' lists (can't live without them!)" but "Leadership is about tapping the wellsprings of human motivation." The '90s version of that '60s word appears to be "empowerment."

Posner and Kouzes describe how their world has changed in the past seven years since the first edition. Power has shifted from a master-slave business hierarchy to a flattened client-server of empowered people. Like Peter Drucker they believe knowledge is the new currency, replacing land and capital. They see less loyalty and workforce commitment but also less job security and more self employment, by choice or not. They also see, surprisingly, a renewed search for meaning and suggest that leaders become "more like trusted friends in this increasingly cynical world." Paradoxically, the authors say: "We're all connected" in a global village, but also: "The world is disconnected" with more countries, more products and more services in a marketplace of smaller pieces. They ask: "How can a leader unite such a diverse and disparate constituency?"

Simple. Just apply the same "five fundamental practices of exemplary leadership" and the adjoining "ten commitments of leadership" found in the first edition, but with new lingo, fresh anecdotes and new "personal best" case studies. In brief, here are the practices and their dual commitment, upon which the entire book is based:

1. Challenge the status quo by embracing change and innovation, and by taking risks, but be willing to accept and learn from any resulting mistakes.

2. Inspire a shared vision. Dream of an ideal future but also set others on fire by communicating the vision clearly and vividly.

3. Enable others to act by building trust while giving power away.

4. Model the way by personal example that is consistent with shared values, and build team commitment with frequent small wins.

5. Encourage the "heart" of subordinates by celebrating team accomplishments and by recognizing individual contributions.

"Love—of their products, their services, their constituents, their clients and customers, and their work—may be the best-kept leadership secret of all," say the authors.

Actually, these five principles are the opposite of the way traditional management operates. Most bosses will expect employees to fall in line and make things run like clockwork, but Item One calls for defiance to the status quo, shaking up the organization. Traditional management may tend to focus on the short term if not present moment, but Item Two gazes well into the future. Item Three has the leader divest of power while traditional management may seek rather to consolidate it. Cool and aloof traditional management behind closed doors may try to rule by threat and fiat, but Item Four suggests leading by personal example. Item Five would be soundly denounced by control freaks as sentimental hogwash, but Posner and Kouzes' leader serves and supports instead of command and control. Tom Peters even goes out of his way to say that Jim Kouzes, "like Winston Churchill, cries easily; he cares."

However, the authors present 36 pages of theory and evidence of statistical methodology and scholarly footnotes to prove they are not sentimental old fools. Kouzes served in the Peace Corps and Posner sits on the local board of Big Brothers/Big Sisters. Together they also authored *Credibility: How Leaders Gain and Lose It, Why People Demand It* (1993). The subtitle of this book reads: "How to Keep Getting Extraordinary Things Done in the Organization."

Dive Right In, The Sharks Won't Bite
by Jane Wesman
Dearborn: Financial Publishing, 1995.

Although Jane Wesman's new book is subtitled "An Entrepreneurial Woman's Guide to Success," it is chock full of good tips and advice for project managers of both genders. The first three chapters focus on getting started in a new business, but the other 13 chapters are filled with generous advice from a real pro.

Jane Wesman was a publicity director for New York publishers before she started her own public relations firm 15 years ago. From experience, she says the entrepreneur needs courage, determination and

energy to survive in a tough market. "Energy is key," she says, urging a low-fat but nutritious diet and rigorous exercise to "clear your head and think creatively." Being well groomed also instilled confidence.

For a woman, access to capital or start-up loans is the biggest problem. She started at home by lining up clients first and securing advances, but today she could have tried a small business "incubator," a suite of offices with common reception, telephone, fax and copier, usually connected to a university or local (county or state) government. She was wise enough to shop around for the right lawyer and accountant for "a good fit" before she retained them.

She spent a lot of time hiring just the right employees, too. Most new hires were cheerful and upbeat; none of them was hired just for the money because they would leave just as soon as a competitor offered more. Generous benefits and incentives were offered in lieu of more money.

To fight the "sharks" in the old boys' network, Wesman joined women's clubs and organizations as networking venues. She returned every phone call, and she never held grudges; people appreciated her thoughtfulness and often recommended her firm to others. She offers the reader 18 tips in the final chapter, her favorite, ending with "Be gentle with yourself . . . Think about what makes you special and what brings joy into your life."

Perhaps her best advice is her first "sharkproof strategy for success." Keep a journal, she says. Record your feelings and impressions. The private journal becomes her lessons learned.

From a colleague at Harvard Business school she learned and kept "the notebook system." Buy one of those marble notebooks, like grade school kids use, the one you cannot tear pages from due to the thread binding. List all the things you need to do on the right hand page, and put meeting notes, reminders and phone numbers on the left hand page. Like the journal, this becomes a valuable record for retrieval and reflection.

The Road Ahead
by Bill Gates
New York: Putnams, 1995.

"Human history becomes more and more a race between education and catastrophe," wrote H.G. Wells in 1920. Seventy-five years later, Bill Gates of Microsoft, arguably the wealthiest man in the world, holes up in his summer cabin to bang out a draft of a book on his PC in order to begin a dialogue on the information superhighway, highway or road. He's not sure.

If he were sure, we should all go out and buy his book and invest in the stocks and commodities he deems hot. No need to. *The Road Ahead* is surprisingly simplistic, if not a bit self-serving. Nevertheless, when a guy like Bill Gates or E. F. Hutton speaks, we should no doubt give a listen.

No single theme holds this book together. It is part biography, part polemic and in large part pure speculation. He denounces the appropriateness of the term "information highway" in the Foreword, but uses it uncritically anyway throughout the book.

In essence, Bill Gates agrees with H.G. Wells—education is the best, perhaps the only solution to the bumps and potholes as we ride the information highway. Education will reduce our fears of emerging technologies and will enable us to navigate better the road ahead.

Education to Gates, however, does not mean formal schooling. To him it means tinkering, serendipity, cramming. His biodata is revealing. His best friend (and later business partner) was three years older and able to explain to inquisitive Little Billy how gasoline was made. Later, the teenage hackers with pocket protectors read *Popular Electronics* and got hooked on the Altair (a Star Trek destination) 8800 minicomputer and wrote a language (Basic) for it—the rest is history. At Harvard, Gates cut most of his classes and just crammed for the final exams. The rest of the time was spent developing software and then Microsoft. He dropped out of college at age 19.

Nevertheless, "education" has more hits in Gates' book than any other topic. His main purpose in writing the book is to educate, as a travel guide to the road ahead. If he were the businessman in Mike Nichols' film "The Graduate," his one-word bit of advice to Benjamin (Dustin Hoffman) would not be "Plastics" but rather "Information."

Down the road ahead, Gates sees convergence of television, the computer, cable and telephone into an "interactive media server" for home entertainment and telecommuting business. Out on the road he will carry the "wallet PC" that not only dispenses "digital money" but also sends and receives faxes, email, stock reports and games. It connects to Global Positioning System (GPS) satellites.

Conveyance of media depends, of course, on telecommunications reform, and wireless technology subsumes the Internet somehow. The CD-ROM, however, is praised for its here-and-now potential. He unabashedly plays the "Encarta" encyclopedia disk (brought to you by Microsoft), but the real test will be the CD-ROM that comes with the book. Will "readers" discard the book and pop in the disk instead? After all, that little Road Ahead CD-ROM contains every word of the book *plus* an "interactive" tour of the highway in business, home and school, in brief video and briefer audio selections. There's even an "Ask Bill" application, showing an animated Bill Gates sputtering glittering generalities. A totally useless "web browser" connects you to sample a commercial online service like CompuServe IF you have a modem. If you don't have "Windows 95," forget it. If you have a Mac, forget even the CD-ROM.

In fact, most of *The Road Ahead* is forgettable. His "Implications for Business" are neither fresh nor original, his notions on "Friction-Free Capitalism" are pie in the sky, and the last chapter, "Critical Issues," covers issues that are not critical at all. His attempts to arrive at a pricing policy for intellectual property are as important as the government's attempt to tax the Internet.

Nevertheless, *The Road Ahead* is an easy read (or view, if you use the CD ROM) and mildly interesting (especially when he tells the history of Microsoft or the story of his new house), but the Nov. 29, 1995 *Newsweek* cover story and pictures are better edited and the October *National Geographic* much more informative.

Video Reviews

The Upper Atmosphere Research Satellite (UARS) Mission
with Charles Trevatan
Goddard Space Flight Center, 1992.

The Upper Atmosphere Research Satellite (UARS) Mission is described in this 45-minute video as "tremendously successful" by narrator Lee Blasso. It was delivered two months early, $30 million under budget, and all systems functional properly in orbit.

The PPMI Lessons Learned and Shared Experiences video features the last project manager, Charles Trevatan, who took over in 1991 from Peter Burke when he became Deputy Director of the Goddard Space Flight Center.

The September 12, 1991, launch marked the beginning of NASA's Mission to Planet Earth. The space observatory was to study the Earth's upper stratosphere and mesosphere for ozone depletion during an 18-month mission.

Trevatan said the good news was cost control in addition to performance and schedule, but especially "dedicated people and organizations." Deputy Project Manager John Donley agreed, noting "stability of people" in this 11-year project that began in 1980, especially the scientist investigators. Of the ten science proposals accepted in 1978, eight of them flew.

Dr. Carl Reber, Project Scientist, added that the most important aspect was mission philosophy: that this was a scientific mission with the end-product as science. A well-defined set of requirements assured success a decade later.

Trevatan noted that since this was a multimission spacecraft, the project showed cost savings up front.

Also, "we knew the interfaces right off," he said, referring to thermal, mechanical, etc.

Richard Baker, Deputy Project Manager for Resources, said the UARS had an adequate flow of funds throughout the lengthy project, partly stimulated by the passage of the Clean Air Act. With good control of contract modification and requirements, along with good interface integration schedules, "we were able to avoid downtime with a full pipeline."

Ellen Herring, Data Systems Manager, noted the difficulty in trying to coordinate 20 remote analysis computers in the U.S., France, Canada and England. However, the team focused early on data system activity and gave a three-day stress test for data delivery bottlenecks. She found the "training material too difficult to comprehend" and recommended "modular training" as users are phased in.

The "tremendously successful" project was not perfect. The ISAMS founder from Oxford University failed, due to bad lubricant in the bearings after a change in motor type and circuitry. Also, a motor clutch stuck on orbit after eight months. Trevatan calls this systems failure a "design flaw" rendering the motor commendable but not automatic.

This video was narrated by Len Blasso. Judy Grady Hamburg was producer, director and scriptwriter for Media Specialist Associates. Gene Guerny served as NASA Technical Monitor.

The Cosmic Background Explorer
with Roger Mattson
Produced by Technical and Administrative Services Corporation, TADCORPS, June 17, 1991.

"Lessons Learned in the COBE Project" was produced shortly after the highly successful launch and early scientific data collection which shed light on the so-called "Big Bang" theory of planetary development and background radiation. Within months, the COBE mission provided valuable data for numerous scientific papers and changed the textbooks in astrophysics.

Project Manager Roger Mattson introduces the informative video with three challenges. First, COBE was by far the largest Goddard Space Flight Center in-house project to date. Secondly, COBE involved instrumentation at a level of extremely high sophistication, and the engineering challenge was great. Thirdly, the pressure was on after the Challenger disaster to achieve excellence. The Shuttle accident also meant COBE would be launched from a ELV rather than the Shuttle, and that the original budget would have to be expanded.

COBE Project Scientist John Mather, who had conceived the COBE mission as early as 1974, notes that all scientific objectives were achieved or exceeded in measurement of a 15 billion-year-old phenomenon. COBE was launched nearly on time.

Deputy Project Manager Dennis McCarthy explains how redesign for the Delta meant smaller volume and weight for the spacecraft, and that in turn mean rebuilding some disciplines at GSFC such as systems engineering and better contamination control.

COBE Flight Assurance Manager Abigail Harper, who came on during the final year of the 10-year project, applauded the extensive reporting and documentation on the project. She advised that Performance Assurance is accomplished best by visual inspection on the floor as well as analysis of documentation.

Earle Young, COBE Instrument Manager, describes new procedures for contamination control and was among those who noted difficulty with the matrix organization, which is better for the institution than the project, and which responds technically, but not administratively, well.

Roger Mattson explains the solution: a Skunk Works operation for the three dozen engineers who had to redesign for a Delta launch in one big room. GSFC had no such room, so eight trailers were hitched together, later becoming home for about the same number of Integration and Testing specialists.

The Skunk Works factory later became the COBE "War Room" where each subsystem schedule, manager's name and action item was posted on the wall for all to see.

Observatory Manager Anthony Fragomeni notes that the Skunk Works concept led to better control of money for procurement orders. He said the large success of COBE was "team spirit" engendered by the synergy of young and old on the job.

John Wolfgang, COBE Integration and Testing Manager, said that despite a tight schedule and resources, it is so important to "do it right" and not cut corners on testing and analysis. Training and mentoring were considered vital as well.

In sum, Project Manager Roger Mattson points to three major lessons learned. First, establish ground rules up front, with rigorous WBS and SOWs. Second, communications systems, internal and external were extensive. An open door policy led to monthly reporting systems, an electronics status report weekly and daily telecon with program managers at headquarters to cut off surprises. Third, technical testing procedures on the ground led to few engineering problems to be solved on orbit.

Bendix Field Engineers provided technical assistance to this production for the NASA Program and Project Management Initiative.