Raytheon

Rapid Tailoring of COTS Products

The EOS Control Center (EMOS) Program

Michael Ruggles
Director, Civil Systems
Raytheon Company

10 September 2002

AGENDA

Program Scope/History

Management/Design Methods

- Design - COTS Tailoring
- Structure and organization
- Leadership

Summary and Recommendations

Program Scope

EOS control center for Terra satellite

Must provide command, control, monitoring, back-orbit analysis, mission planning, ground equipment command and control

NASA s Earth Observing System - Global Climate monitoring satellite

5 instruments, variety of locations for principal investigators and tasking

Includes operator training and certification

Instrument support toolkits in multiple countries

Networks across the US, Japan, and Canada cause security concerns

TDRSS/ EDOS/ EPGN interfaces

External Interfaces for communications and flight dynamics

Terra Satellite

Raytheon

Spacecraft

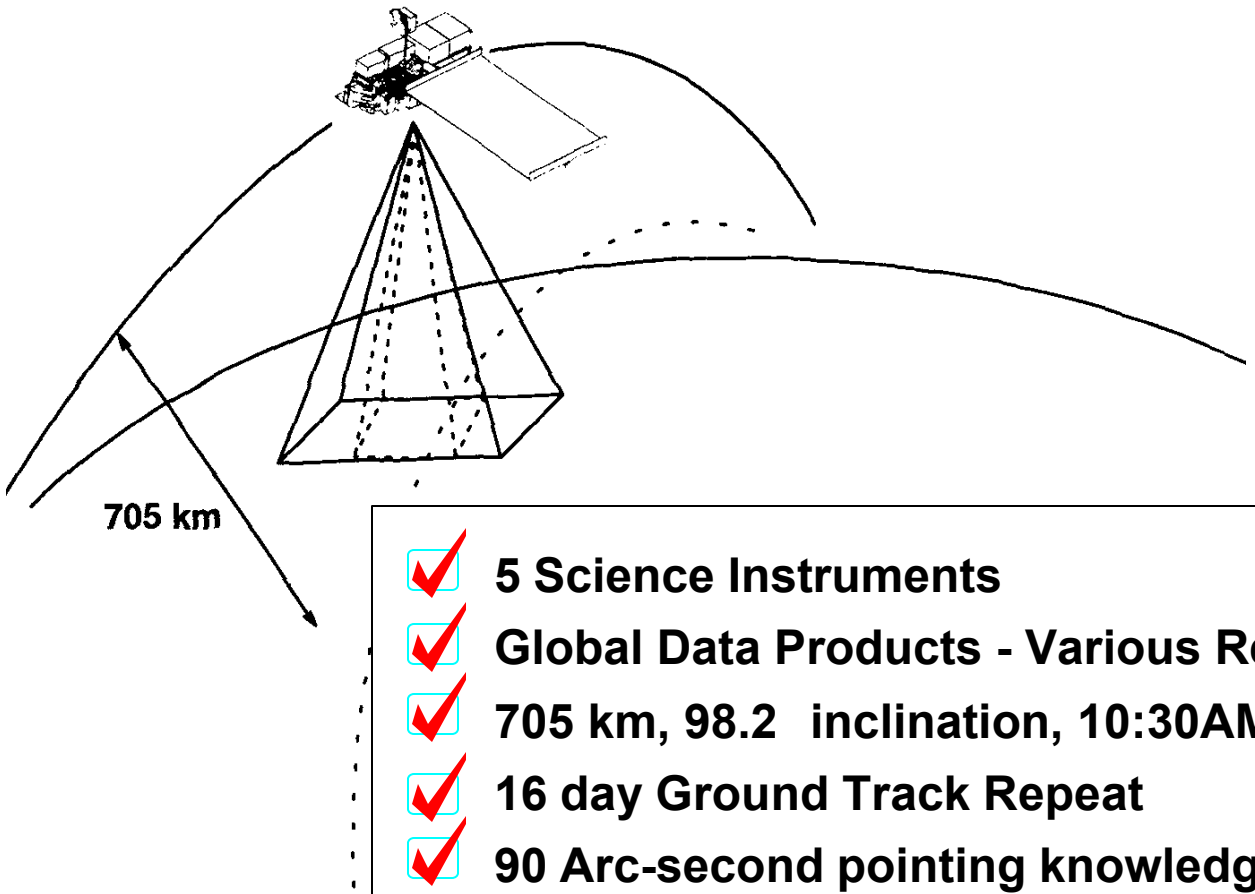

- 5 Science Instruments
- Global Data Products - Various Resolutions
- 705 km, 98.2 inclination, 10:30AM Descending Node
- 16 day Ground Track Repeat
- 90 Arc-second pointing knowledge
- 150 m position knowledge

Raytheon

EOSDIS Ground System Context

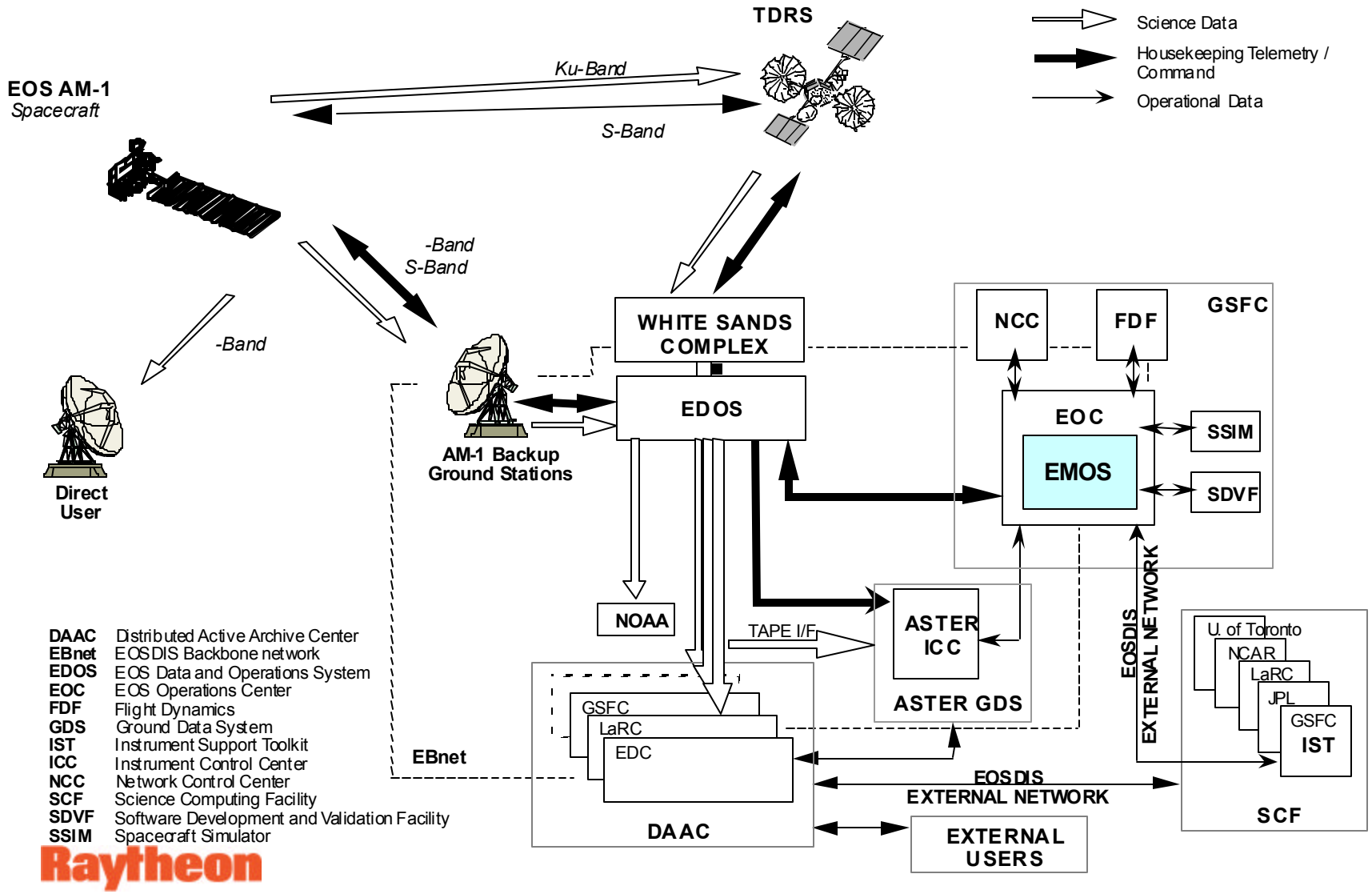

Raytheon

History

Program started in 93 with Control center subcontracted

Launch scheduled 98, program assessment as spacecraft came out of thermal vacuum testing

- Launch SLIP pinned on control system failure

NASA was HIGHLY motivated to launch quickly

- Spacecraft storage costs $5M/month
- Spacecraft manufacturer (LM) shutting down their Valley Forge facility
  - Losing key talent

There was a joint decision (NASA and Raytheon) to change the control segment baseline implementation

The program was challenged to hit a 7 15 99 launch date on 10 26 98 - 8 months to system certi ication

Raytheon

Schedule (7/1/99)

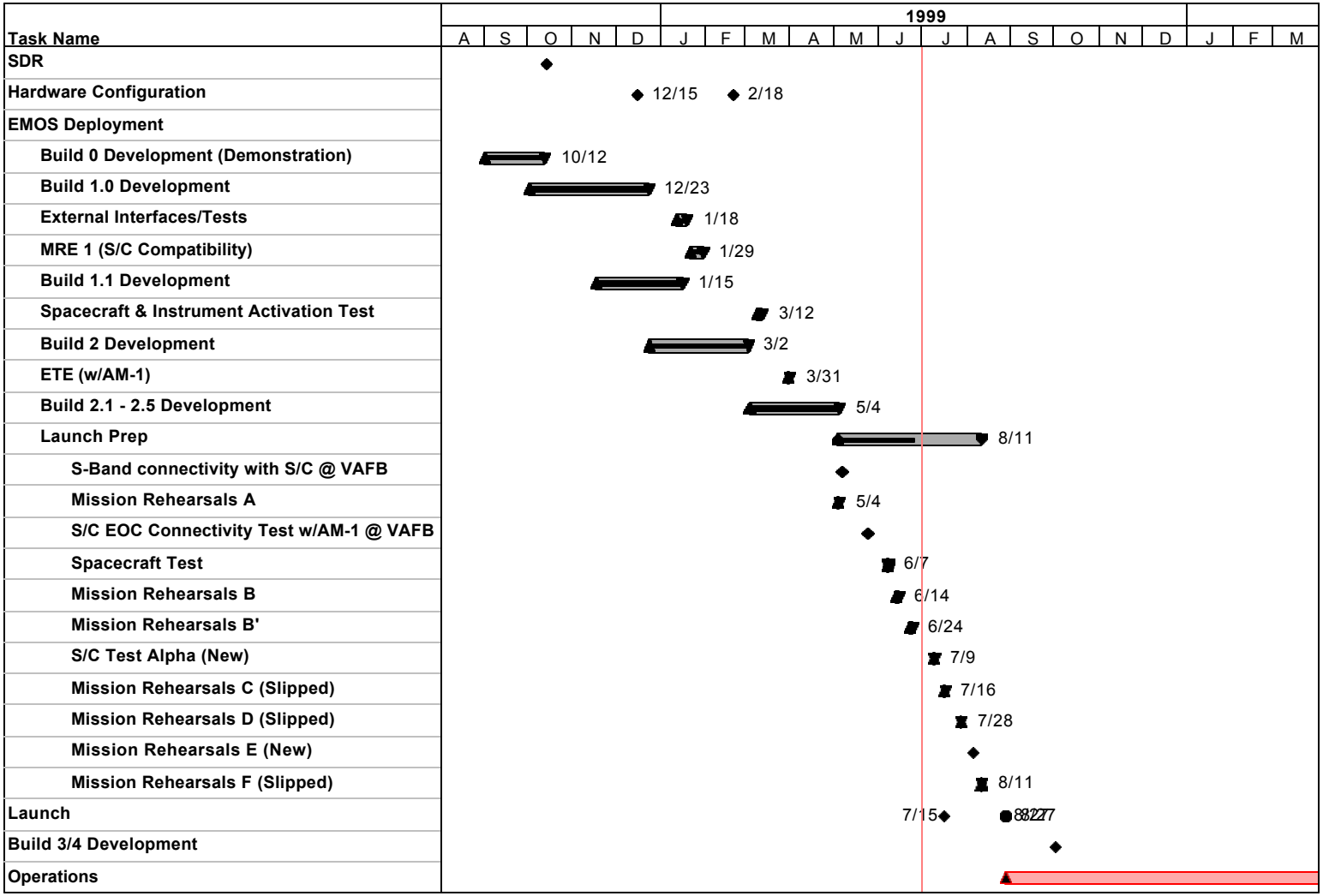

Raytheon

Schedule (continued)

The schedule illustrates several key points:

- First delivery to the ops floor in 2 months
- First test with the spacecraft in 3 months
- Flight ready system in 5 months
- Operations training in parallel
- Participation in end-to-end tests and mission rehearsals

Note: the schedule (7/1) shown shows the launch date slipping due to launch vehicle failures

Methods/Techniques to facilitate rapid development

Raytheon

Requirements Management

A NASA, LM (satellite), Raytheon team (including LM operations) was formed to prioritize requirements

- The week of 1 Nov. 98 was used to determine launch critical requirements, and make some fundamental architectural decisions

Requirements management was critical for the remainder of the development to facilitate rapid development

- The initial requirements allocation, however, was done quickly
- Flexibility remained a key to keep operations and NASA satisfied
- Formal CCB process was used, but emergency sessions were called to meet milestone needs

Methods - Design

The program was challenged to perform an extremely rapid development. After agreeing with NASA to change the baseline approach, we looked at existing products to meet the architectural needs.

The single most important architectural decision was to abandon a complex, monolithic software approach and to adopt a 3 subsystem approach

- This facilitated 3 teams that would work in parallel
- Interfaces between subsystems were kept at a very simple (flat file) level

EMOS Technical Approach

- Use *Eclipse* Online Subsystem to replace the existing EMOS real-time functionality
- Reuse NASA/ISI CBASS system to replace the existing EMOS offline and NCC C2 functionality
- Reuse EMOS Planning and Scheduling, Command Management and Data Management software and incorporate into the Mission Management Subsystem
- Modify the FOT operations concept so that the *Eclipse* System can be used with only the minimum changes required to support the AM-1 Spacecraft
- Provide multiple builds to reduce risk and get functional capability to the FOT, in order to begin AM-1 training and launch readiness activities as soon as possible
- Reuse existing ECS computer hardware to the fullest extent possible, to reduce schedule associated with long lead items.
- Preserve all ECS interfaces, including science instrument interfaces
- Provides system that can grow to support multiple spacecraft and instruments and growth in capabilities with a high degree of automation

Raytheon

Subsystem Architecture

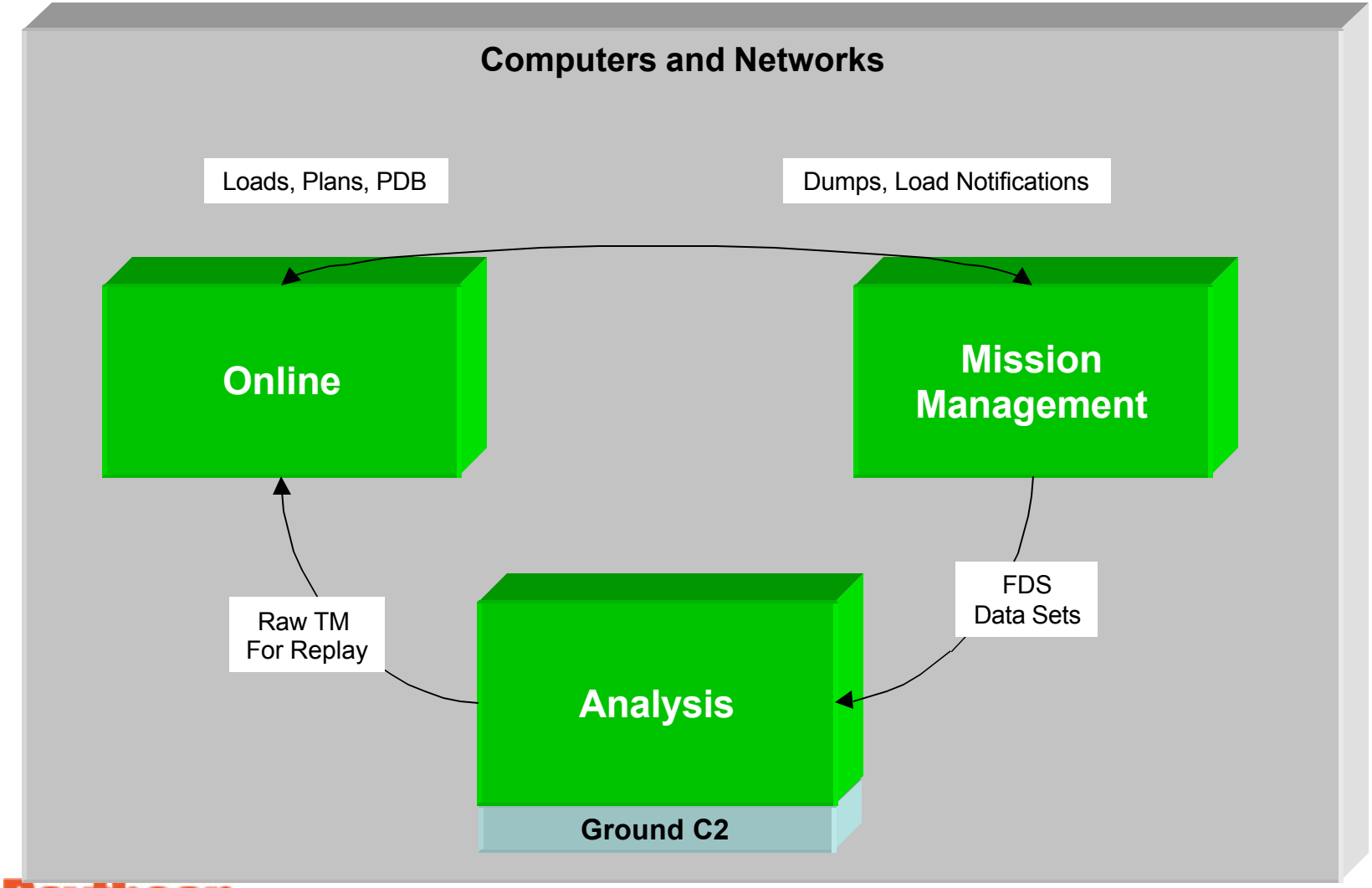

Raytheon

Inside *Eclipse*
Eclipse Reuse for EMOS

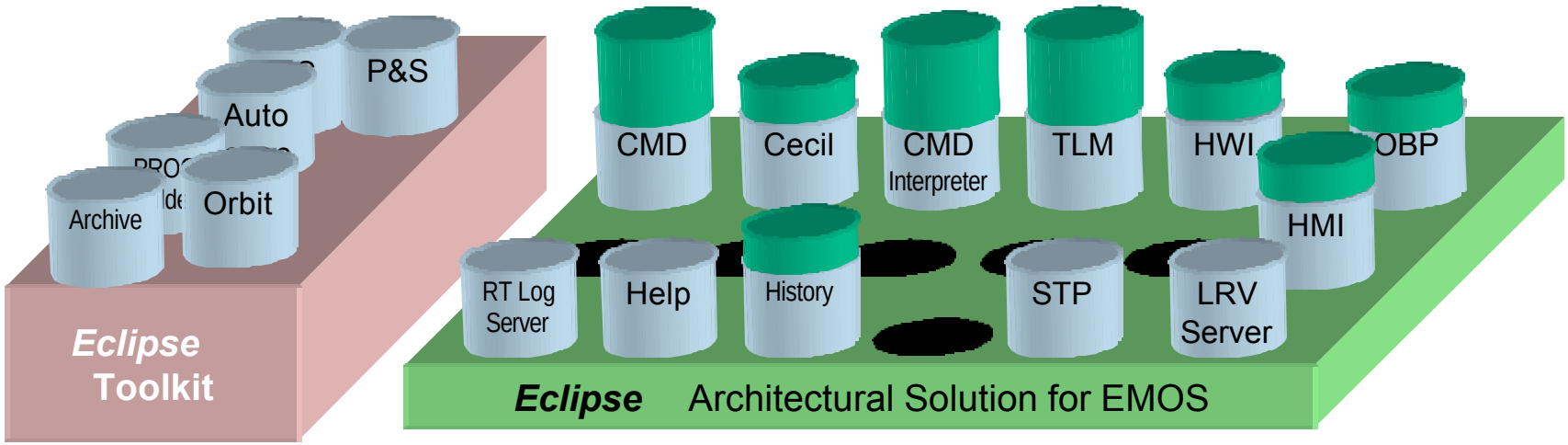

Open Reference Architecture Allows:

- Multiple Contractors and Distributed Development
- Varying COTS Products
- Differing Concepts of Operation & System Architecture
- Technology Evolution
- Legacy Insertion

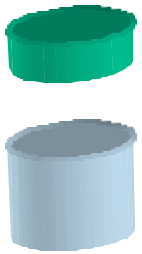

Project Specific Variation

Core Component

Raytheon

Software architecture promotes rapid tailoring

The Eclipse (Online) Subsystem was the schedule critical path

Much of the existing underlying infrastructure was unchanged

- Modifications of application code was greatly accelerated through the presence of a stable infrastructure
- The layered model of network software works well for distributed compute environment systems
  - A good portion of infrastructure code can be procured

Raytheon

EMOS/EOC Architecture

Operations and Support Areas

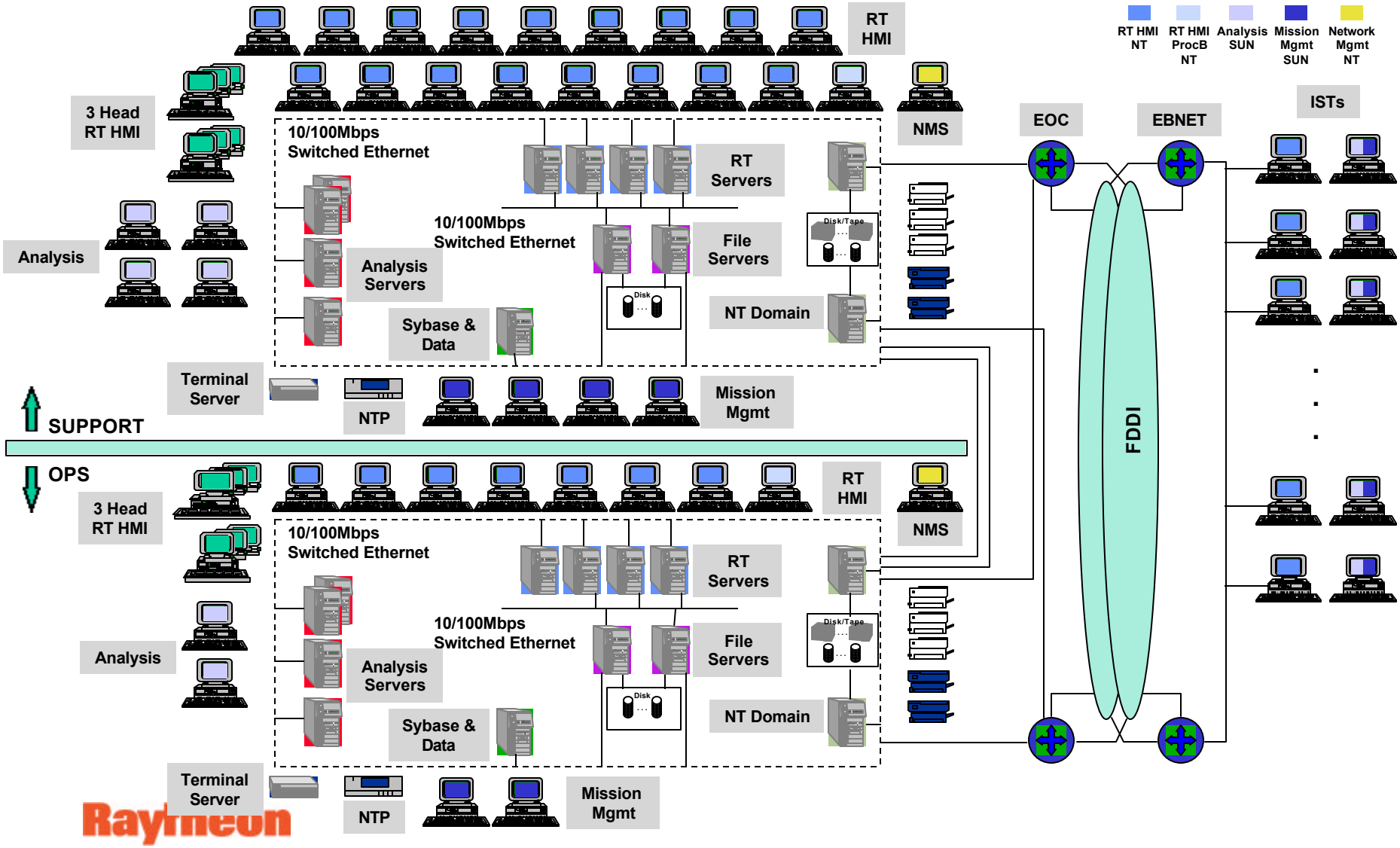

EMOS Computer & Network Hardware

The ECLIPSE System is NT-based

This allowed the configuration of office equipment as a temporary Ops Center

- This did not meet full performance requirements, but allowed operator development of procedures, training, and tests with satellite
- This took the hardware off of the schedule critical path, allowing time to procure the final, full performance compute hardware

The rest of the system (Unix-based) reused previously procured equipment

Denver Development (ECC)

Integration and Development Environments

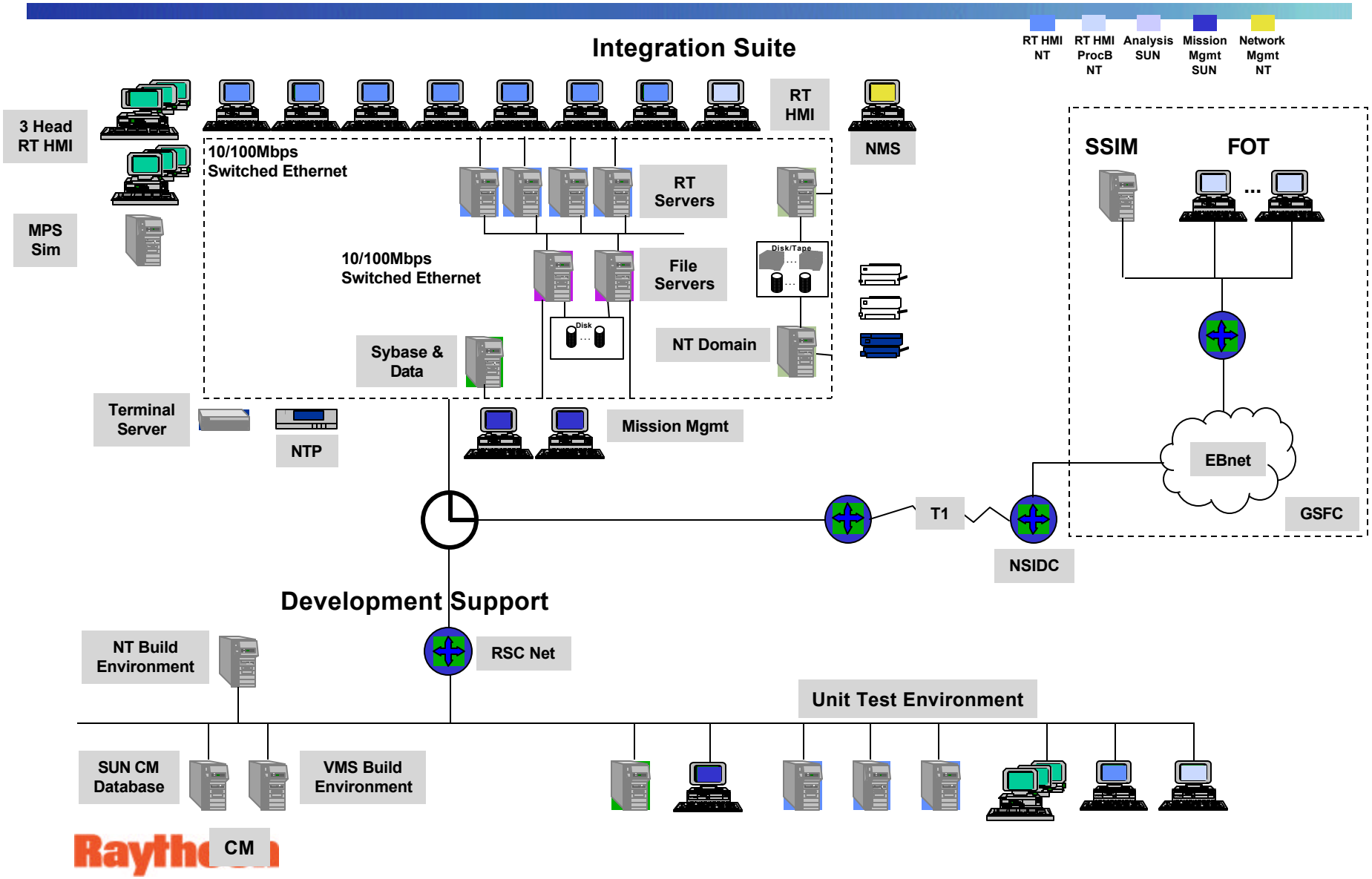

Electronic connectivity facilitated rapid development

The critical path development occurred 1500 miles from GSFC

Early connectivity to the EOC allowed rapid development

- Tests against high fidelity satellite simulator were critical to gaining confidence in system functionality
- Remote installation reduced travel costs, improved deployment speed
- Remote monitoring during critical tests allowed rapid troubleshooting by developers when problems did occur

Methods - Structure/Organization

The program structure (org) and design are coupled

- After some basic design decisions were made, the program was structured to match the design
- Three development teams were established, one for each of the three subsystems
- Operations were managed from the East Coast
- System engineering remains critical for requirements management/implementation

Both Operations and development report to the same PM

- Minimized us/them mentality, helped with teamwork

Subcontract management remains a critical skill

ISTs were deployed as part of the computers and networks team

The program was functionally organized (hardware, software, systems) rather than IPTs

- Both approaches can work, in this case the performing org of the critical path elements were used to working in a functional environment

Raytheon

EMOS Organization

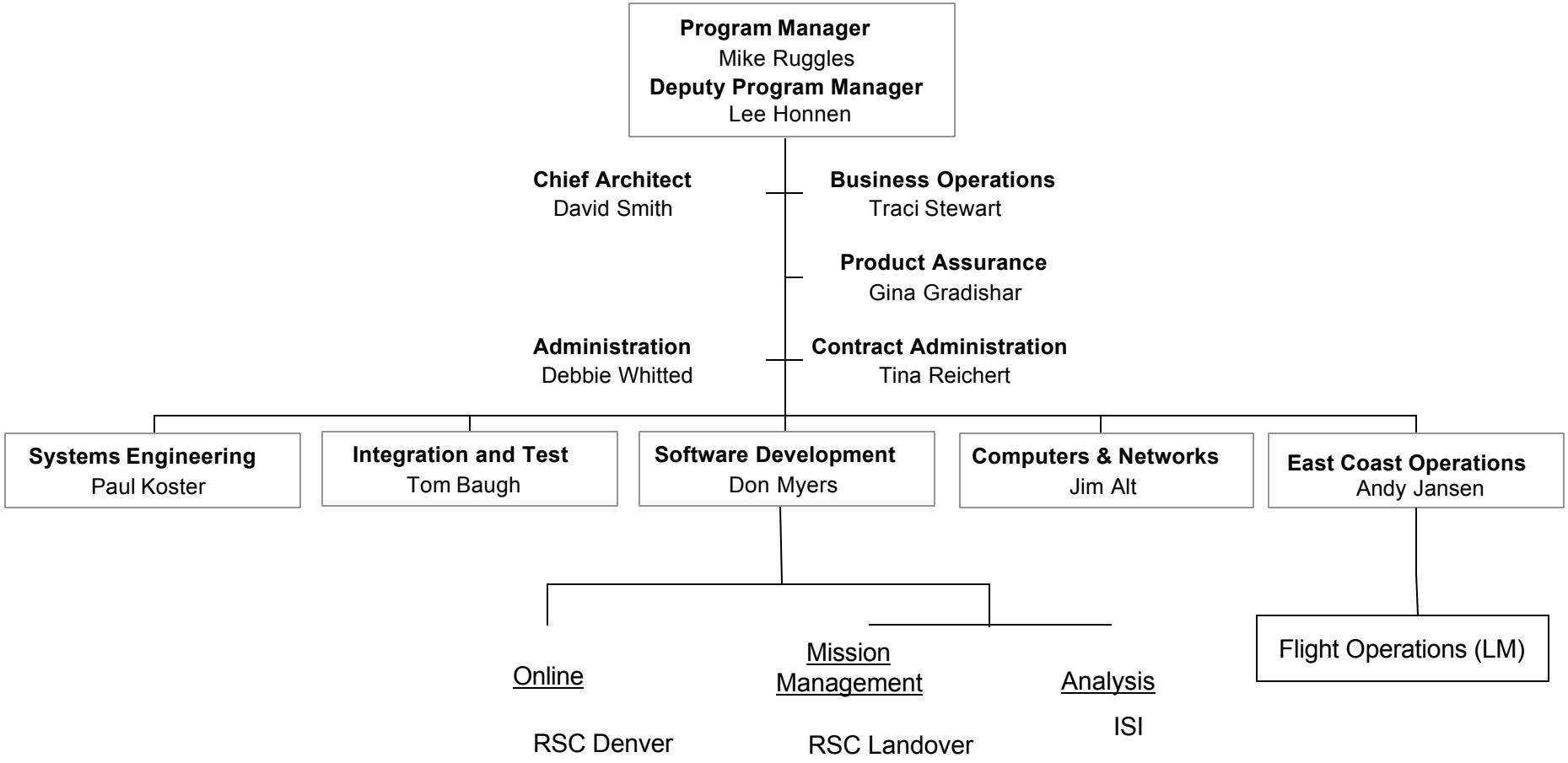

Raytheon

Staffing

Needed to staff 125 system engineers, software developers, system administrators, and test engineers in one month

Approach - used ECLIPSE-knowledgeable, available staff (50), other available staff (25), and contract labor (25)

Lesson - Contract labor for software engineering is far better than it used to be

Raytheon

Tools

Standard program management tools were used to run the program, with one exception: customer incentives

- Earned Value - managed to about one staff-month increments
  - would typically like better task resolution, but the dynamic nature of the program made it unworkable
- Schedule - used MS project to communicate across multiple sites and report status
- Staffing - weekly reports to track levels vs. plan
  - turnover had been an issue
- Customer Incentives (morale) - NASA offered the contractor incentives as a cost-avoidance technique
  - The incentives were valuable and appreciated in terms of attracting capable staff
  - Retention may have been aided as well

Methods - Leadership

Both NASA and Raytheon changed leadership as the EMOS program started

- NASA installed an experienced operations manager to oversee the program, who had the authority to do what was necessary to meet the launch dates
- Raytheon put in place program management experienced with rapid developments
- A good working relationship was quickly established
  - NASA requested the early requirements review
  - Compliance with early deliveries gained confidence at NASA and on the ops floor in the approach

Trust was critical - sometimes personnel change is necessary

In the end, the team was committed to success

- NASA relaxed unnecessary requirements, and Raytheon performed to additional, necessary requirements

Incremental Deliveries

The development team was set up to operate in parallel. The operations team had to be set up to operate in parallel as well.

Incremental deliveries were tailored to provide functionality to meet operators needs

- Initial Procedure building tools
- Basic TT&C capabilities for training and early test
- More complete TT&C capabilities and interfaces for system tests
- Launch ready capabilities for mission rehearsals and operator certification

Additional benefits with incremental deliveries were seen

- Confidence from NASA, the instrument community, and operators that the approach would work
- Interface issues were surfaced early

Development Process

The development process was streamlined to allow rapid deployment

- Only one design review
  - would not work without strong heritage and well-understood requirements
- Code walkthroughs remained required with associated evidence
- Each of the three development teams was allowed to develop within their own tool set and their own CM system
  - flowdown of detailed SDP requirements typically does not work rapidly
- Rigorous system requirements management
  - Requirements to build mapping is critical to keep team together
- Informal integration (developers) followed by formal integration facilitated speed

Raytheon

Development Process (cont.)

System testing was done to informal, rapidly generated test procedures in the factory

Formal testing was done on site, but was still less than desired by Raytheon and NASA

- Testing with the satellite simulator gave a high degree of confidence in the system
- Independent System test teams performed additional site tests
- Finally, successful tests with the spacecraft were the ultimate proof of functionality
  - Found some spacecraft problems, proving that even good simulators are not perfect

Y2K testing was more difficult than the design and implementation

Raytheon

Other management simplifications

NASA buy in to the approach facilitated the rapid deployment. Contract requirements were for NASA to approve the purchase of every single piece of hardware. NASA relaxed this requirement, approving the system block diagram. This allowed procurement of the computer and network hardware to meet delivery needs.

Quality requirements. NASA permitted Raytheon to use commercial development standards in fielding the system. This left a deficit for several quality management system requirements. Ultimately, the successful use of the system with 75 operators proved the system quality.

International - TAA

In the Spring of 1999, Congress passed laws that included satellite TT&C and remote sensing data processing systems on the ITAR list. This required DoS approval rather than DoC to obtain an export license

Technical Assistance Agreements were also required to pass information to foreign nationals

The wait time was lengthy - multiple months - as the DoS grappled with its new responsibilities

Meanwhile, conversations with the Japanese and Canadians were less than satisfying

Diligent attention to the export approval process and personnel was necessary to allow the remote installations

Export compliance laws continue to hurt S manu acturers

Success!

Met First delivery in 2 months

Met First S/C test in 3 months

- Received standing ovation from instrument operators

Supported end-to-end test at 5 months

Met 6/23 launch certification date

- In time to support 7/15 launch date
- Launch date slipped to 12/18 due to launch vehicle problems

Successfully supported launch and operations

- Science mission continues to generate useful data

Raytheon

Terra Launch-18 December 1999

Raytheon

Mission Operations Center

Raytheon

Mission Operations Center

Raytheon

Mauna Loa / Tokyo, Japan

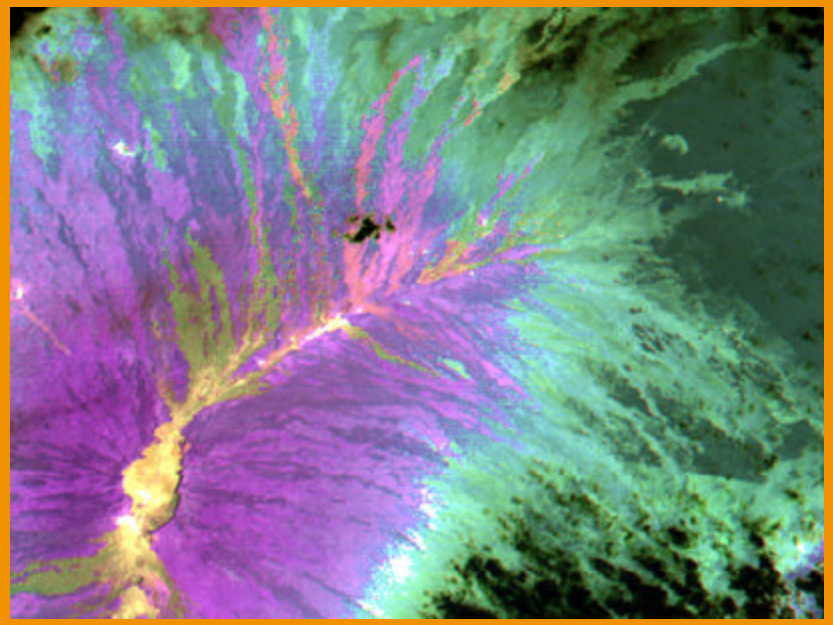

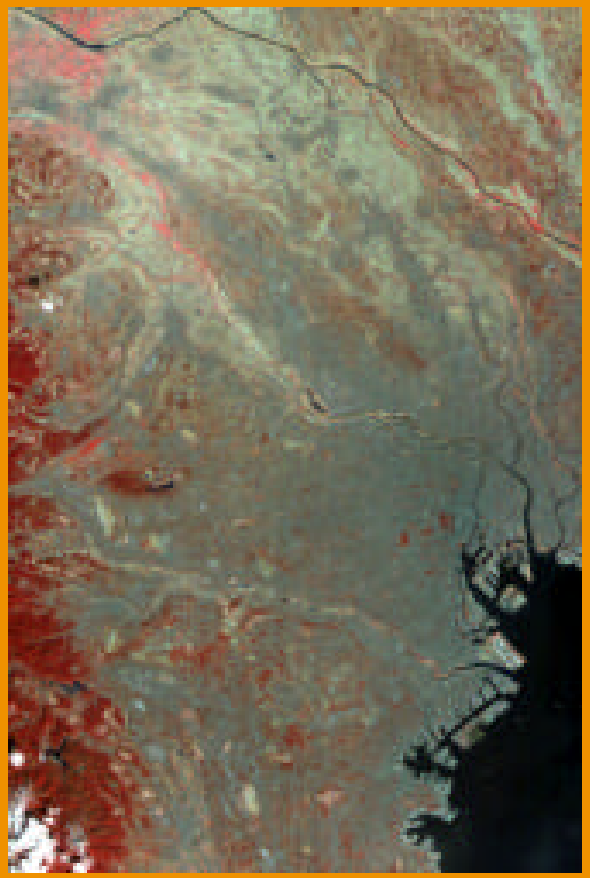

Raytheon

San Francisco Bay

Gulf Of Mexico

Raytheon

Himalayas

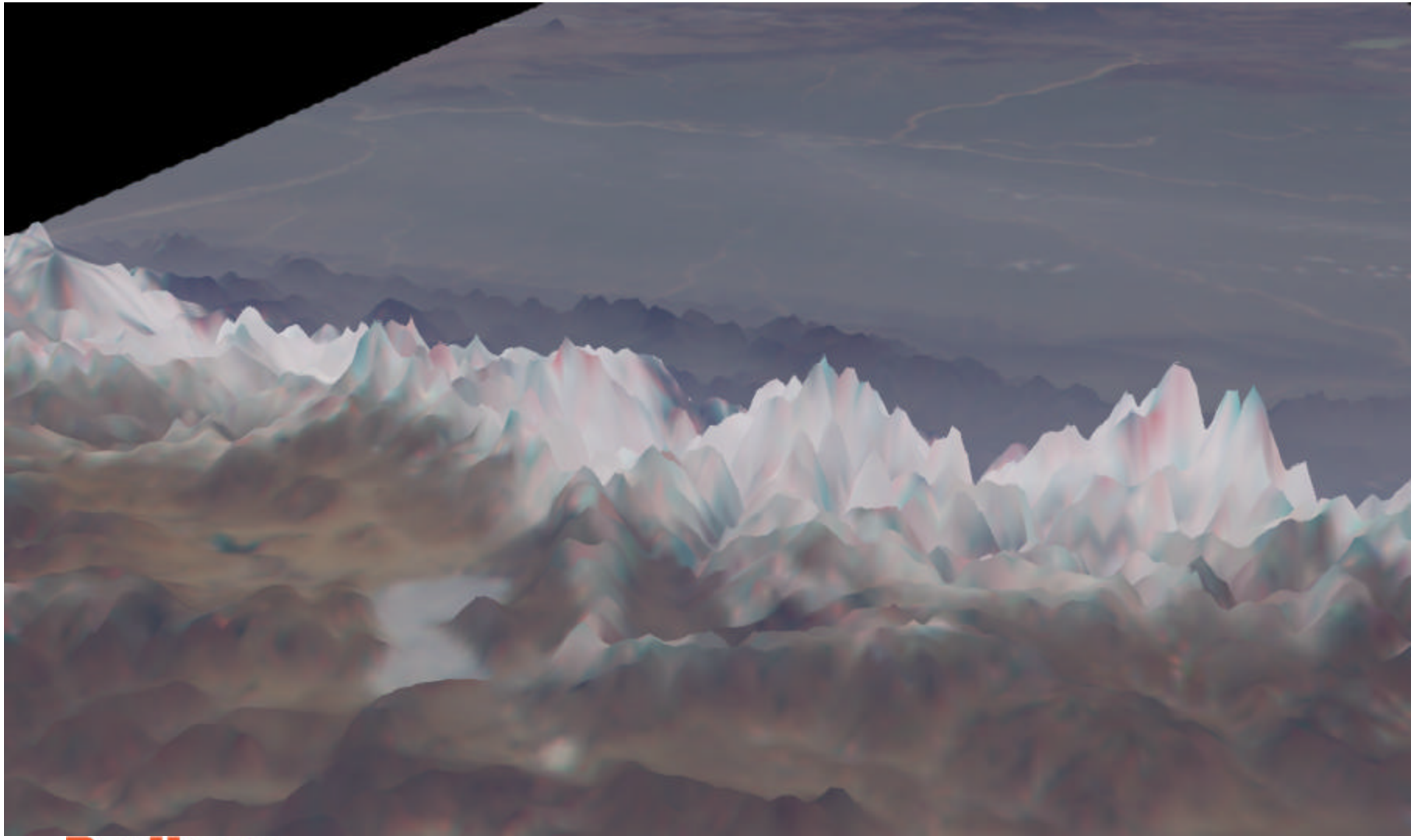

Management Shared Lessons

It takes strong management commitment, both customer and contractor, to make a major baseline change

Establishing teams to work in parallel can reduce development time IF interfaces are simple or well-understood

For software products, a flexible architecture is fundamental to allow rapid extension/tailoring

- Many times architecture ease of tailoring is at least as important as some inherent capabilities - needs to be considered when selecting COTS products for modification
- A stable infrastructure allows rapid application development

Leadership must communicate well and frequently

- Expectations are only met when well understood by all involved