Mars Global Surveyor
Solar Array Assembly

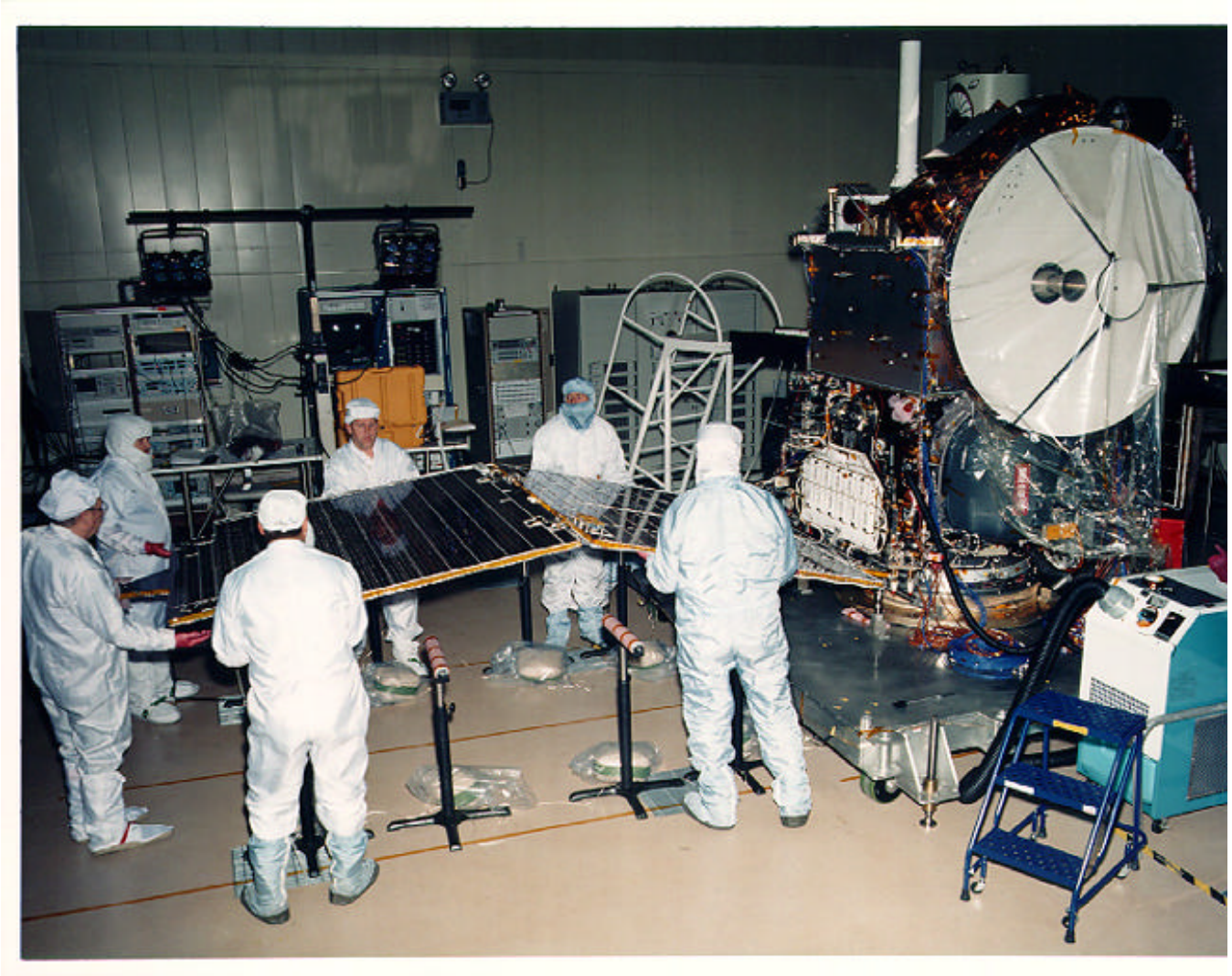

Mars Global Surveyor
Implementation History - Operations

Mars Observer

13 remote science sites for instrument commanding, engineering, and data processing/archiving.
Spacecraft operations/DSN I/F at JPL.
Budget profile: 30M$/yr. Total: 122M$ FY93-FY96; (10 mo cruise, 2 yr mapping, 1yr relay). 120myr/yr

Mars Global Surveyor

11 remote science sites with experienced personnel using streamlined MO software/procedures
Spacecraft operations /DSN I/F moved to LMA.
Budget: 20M$/yr, Total: 106M$ FY97-FY00; 35 myr/yr (without science site manpower).

Following launch, Solar Array deployment damper failure created a cracked yoke resulting in an extra year of aerobraking/science phasing orbit to obtain final 2 AM Mapping orbit. Added cost: 30M$

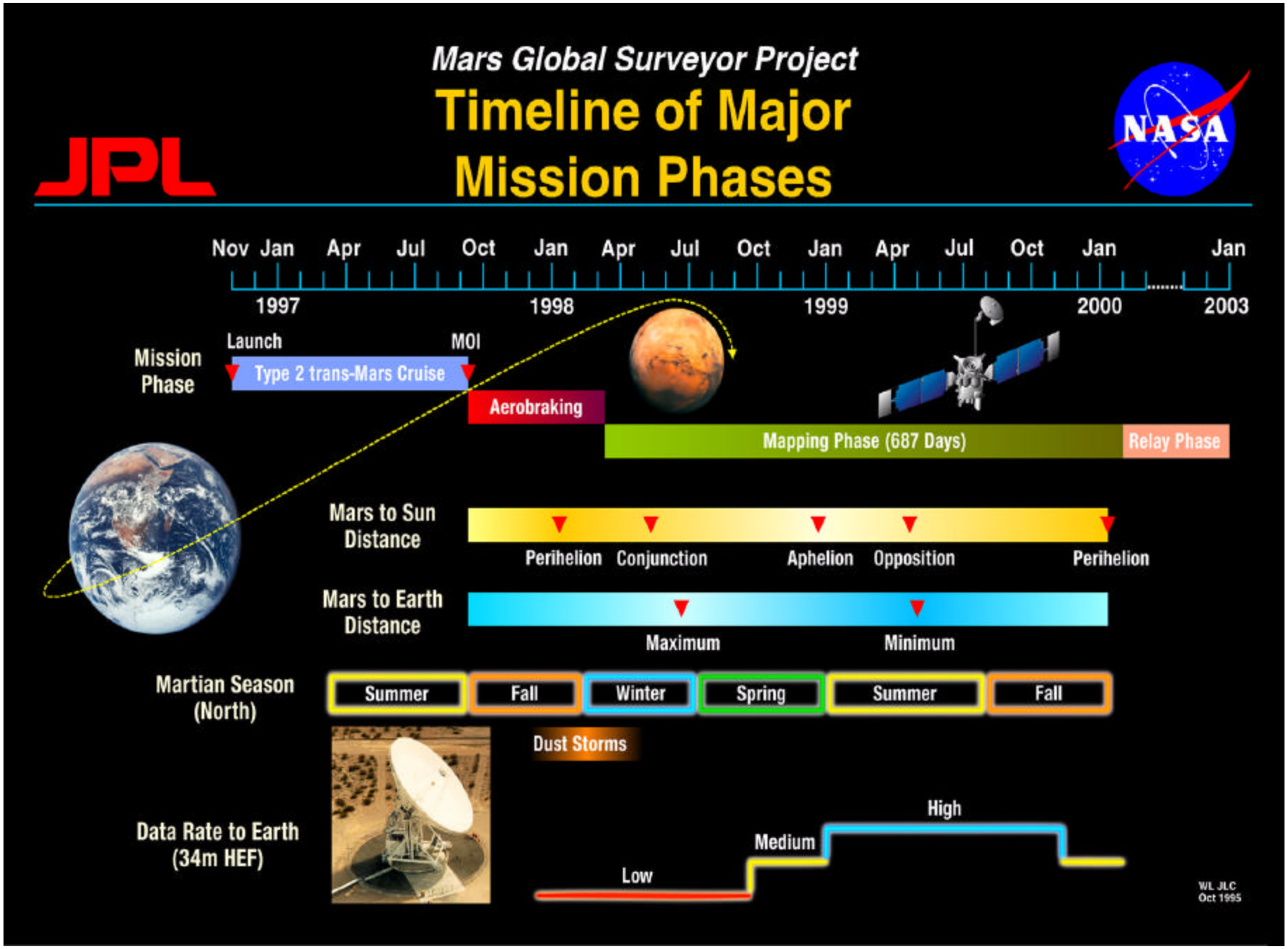
Mars Global Surveyor Project
Timeline of Major Mission Phases
JPL
NASA
Nov Jan Apr Jul Oct Jan Apr Jul Oct Jan Apr Jul Oct Jan Jan
1997
1998
1999
2000
2003
Mission Phase
Launch
MOI
Type 2 trans-Mars Cruise
Aerobraking
Mapping Phase (687 Days)
Relay Phase
Mars to Sun Distance
Perihelion
Conjunction
Aphelion
Opposition
Perihelion
Mars to Earth Distance
Maximum
Minimum
Martian Season (North)
Summer
Fall
Winter
Spring
Summer
Fall
Dust Storms
Data Rate to Earth (34m HEF)
Low
Medium
High
WL JLC
Oct 1995

Mars Global Surveyor
SPACECRAFT CONFIGURATIONS

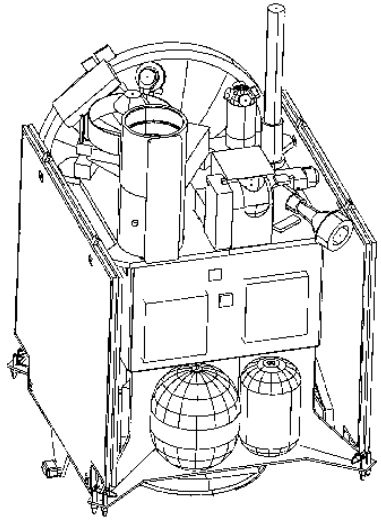

Launch

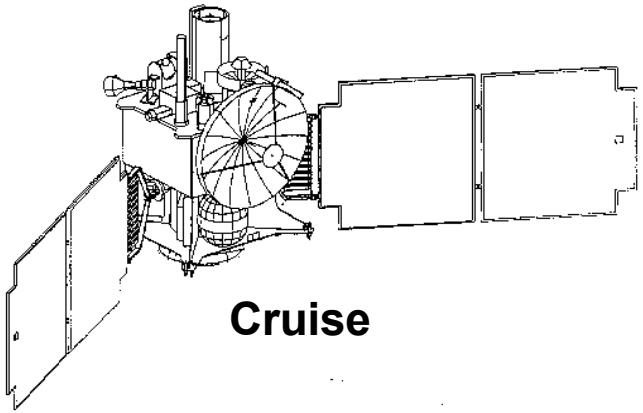

Cruise

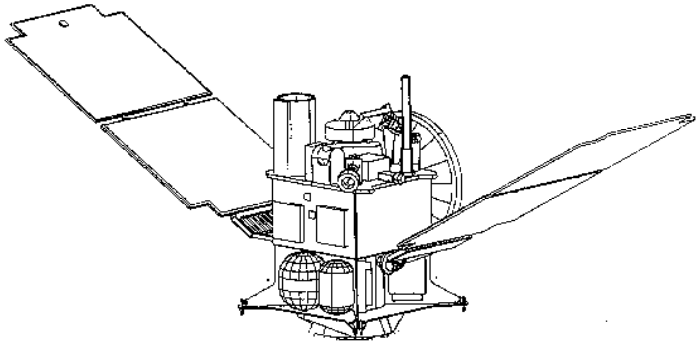

Aerobrake

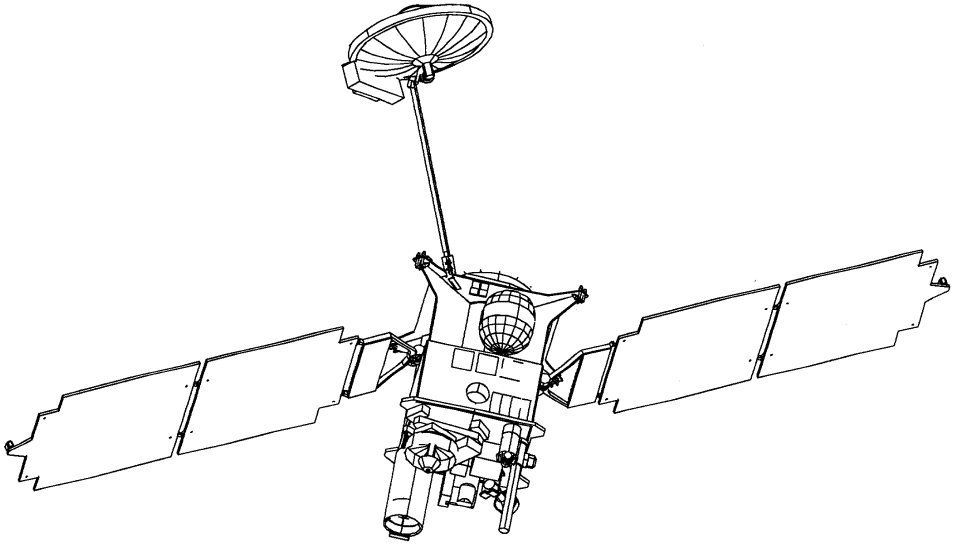

Mapping

Mars Global Surveyor Project

Initial Capture Orbit Geometry

Capture Orbit Statistics:

48 Hour Period
Highly Elliptical (e = 0.88)
56,400 km Altitude at Apoapsis

Mapping Orbit Goal:

2 Hour Period
Circular Orbit
378 km Altitude

ΔV (slow down)
of 1.25 km/s
(2,800 m.p.h.)
Needed for Goal
That's a Lot to Ask!

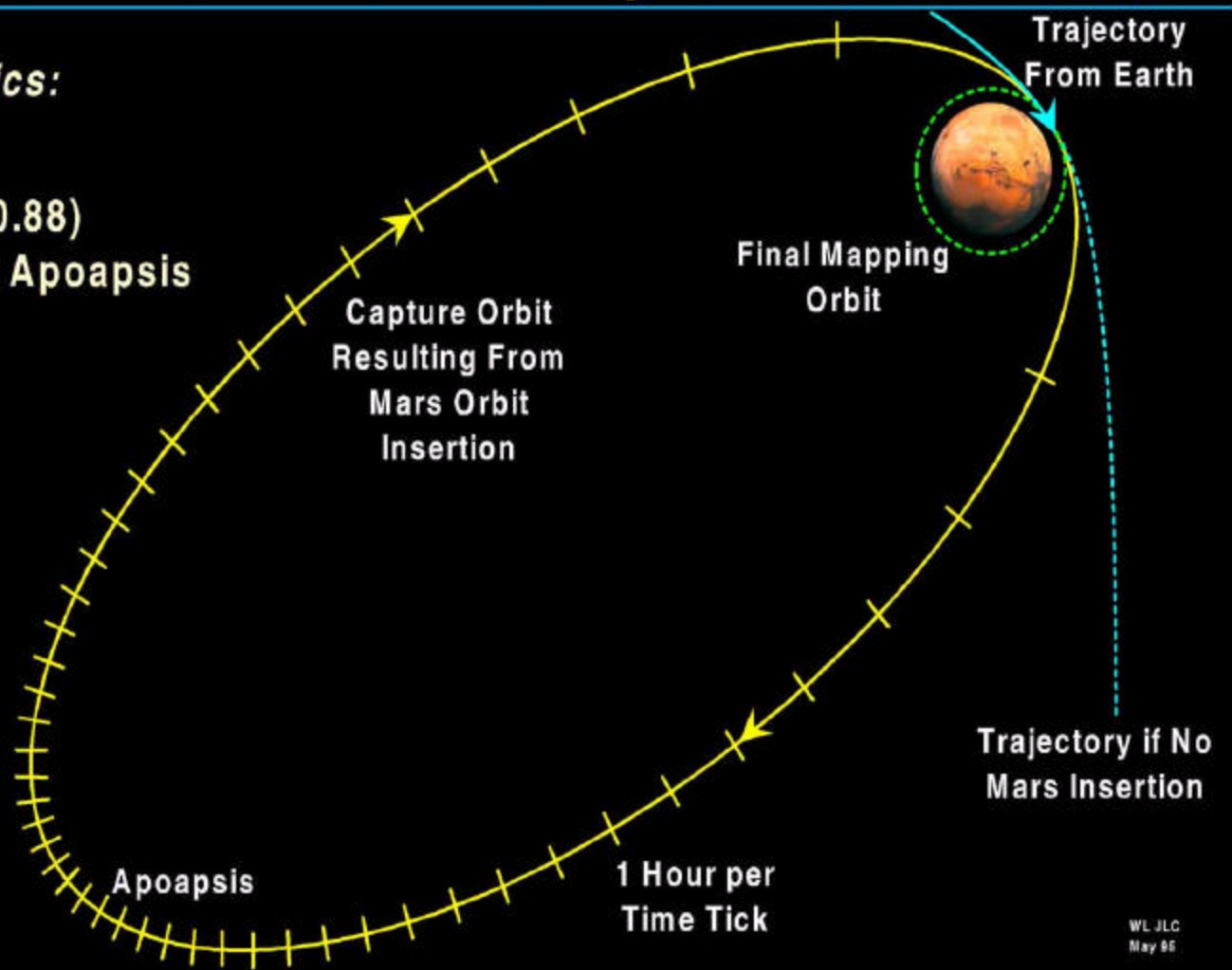

WL JLC
May 95

Mars Global Surveyor Project

MGS Mapping Orbit Geometry

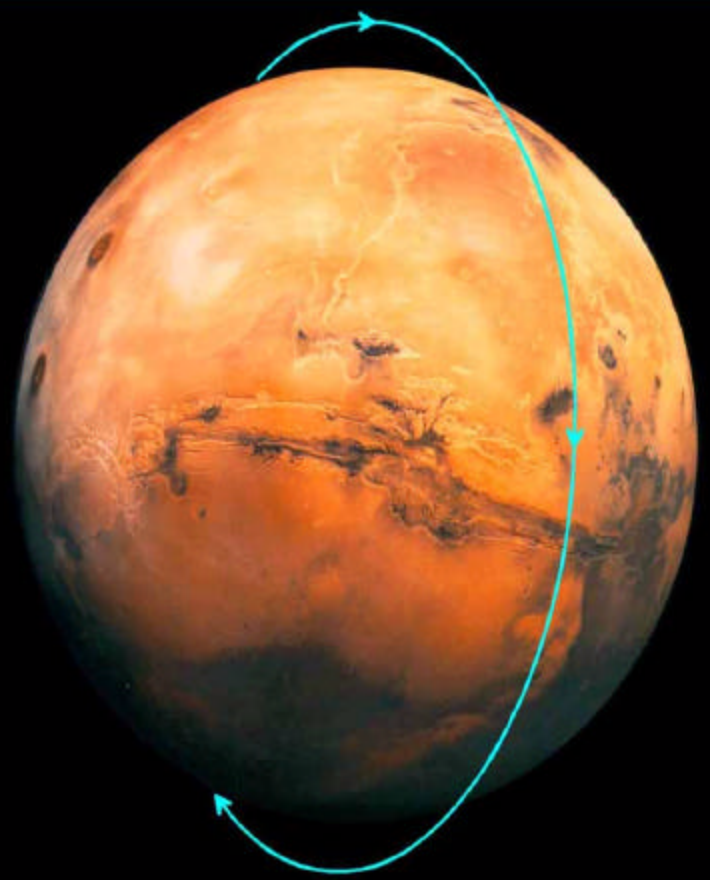

View From Sun on
1 August 1999

Semi-Major Axis

3775 km (378 km index altitude)

Inclination

92.866°, nearly polar

Eccentricity

0.007, nearly circular

Descending Node

Always at 2:00 p.m. orientation with respect to the fictitious mean Sun

Periapsis

-90.0°, near the Martian south pole

Ground Track Cycle

Approximately repeats after 88 revolutions, each orbit lasts for about 118 minutes

WL JLC
July 1995

Mars Global Surveyor
Operations Configuration

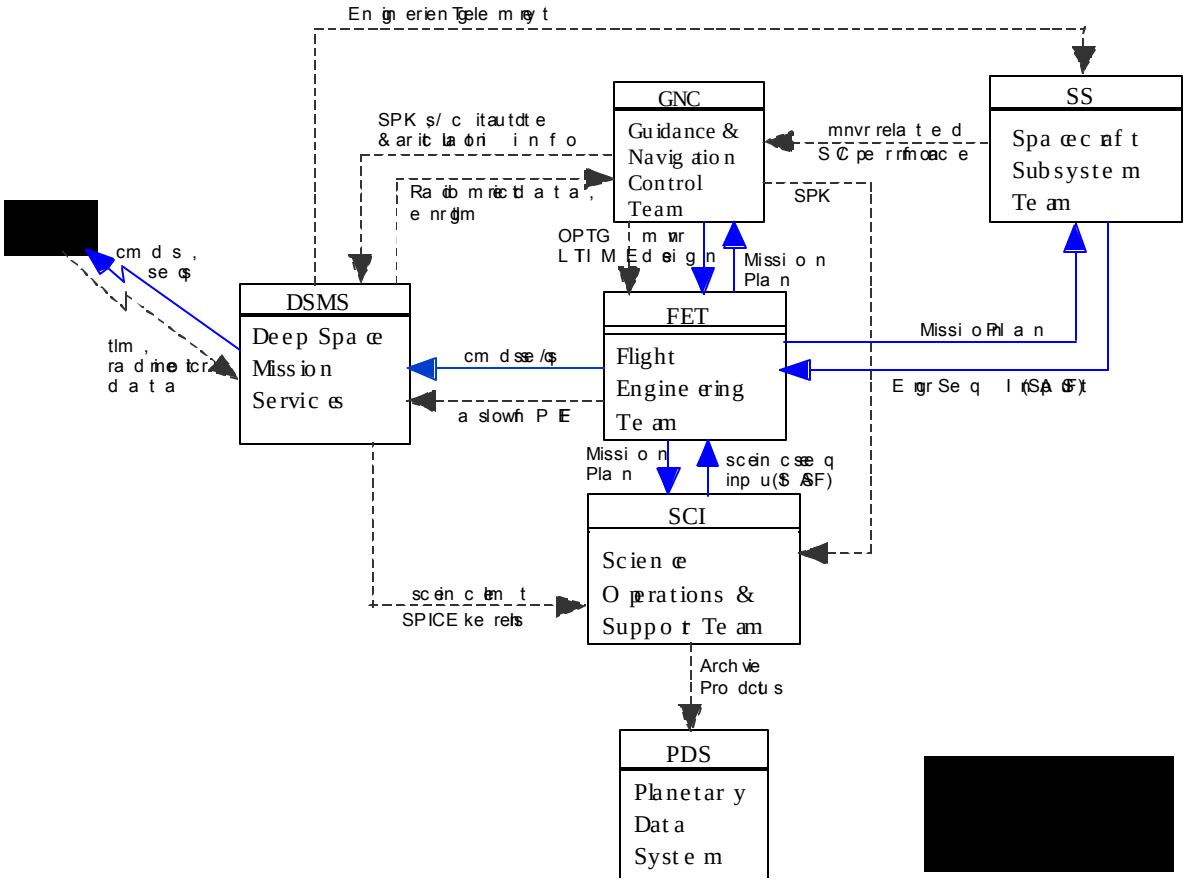

Mars Global Surveyor
SCIENCE STATUS

15,600 MAPPING ORBITS COMPLETED

125,528 IMAGES; 670,000,000 RANGE PULSES; 129,334,047 SPECTRA; 13,135 OCCULTATIONS; 31, 000,000 MAGNETIC SAMPLES; GRAVITY TO 75 X 75 DEG.

MAJOR FINDINGS

DISCOVERY OF CHANNELS CUT BY WATER FLOW AND SAPPING AT MID-LATTITUDE SITES. EVIDENCE FOR ANCIENT WATER BEDS

DISCOVERY OF INTENSE MAGNETIC ANOMALIES IN THE ANCIENT SOUTHERN HEMISPHERE CRUST

EXTREME FLATNESS OF NORTHERN HEMISPHERE (1KM/3000KM),
MEASUREMENT OF POLAR CAP THICKNESSES AND DEPTH OF HELLAS

DISCOVERY OF COARSE-GRAINED HEMITITE DEPOSIT AND CLOSE UP
MEASURMENT OF PHOBOS THERMAL PROPERTIES

DISCOVERY OF EXTENSIVE LAYERING IN THE CANYON WALLS OF VALLES MARINERIS AND FINDING SAND DUNES EVERYWHERE

DISCOVERY OF STABLE ATMOSPHERIC WAVES. SEASONAL CHANGES

Mars Global Surveyor
MOLA TOPOGRAPHY

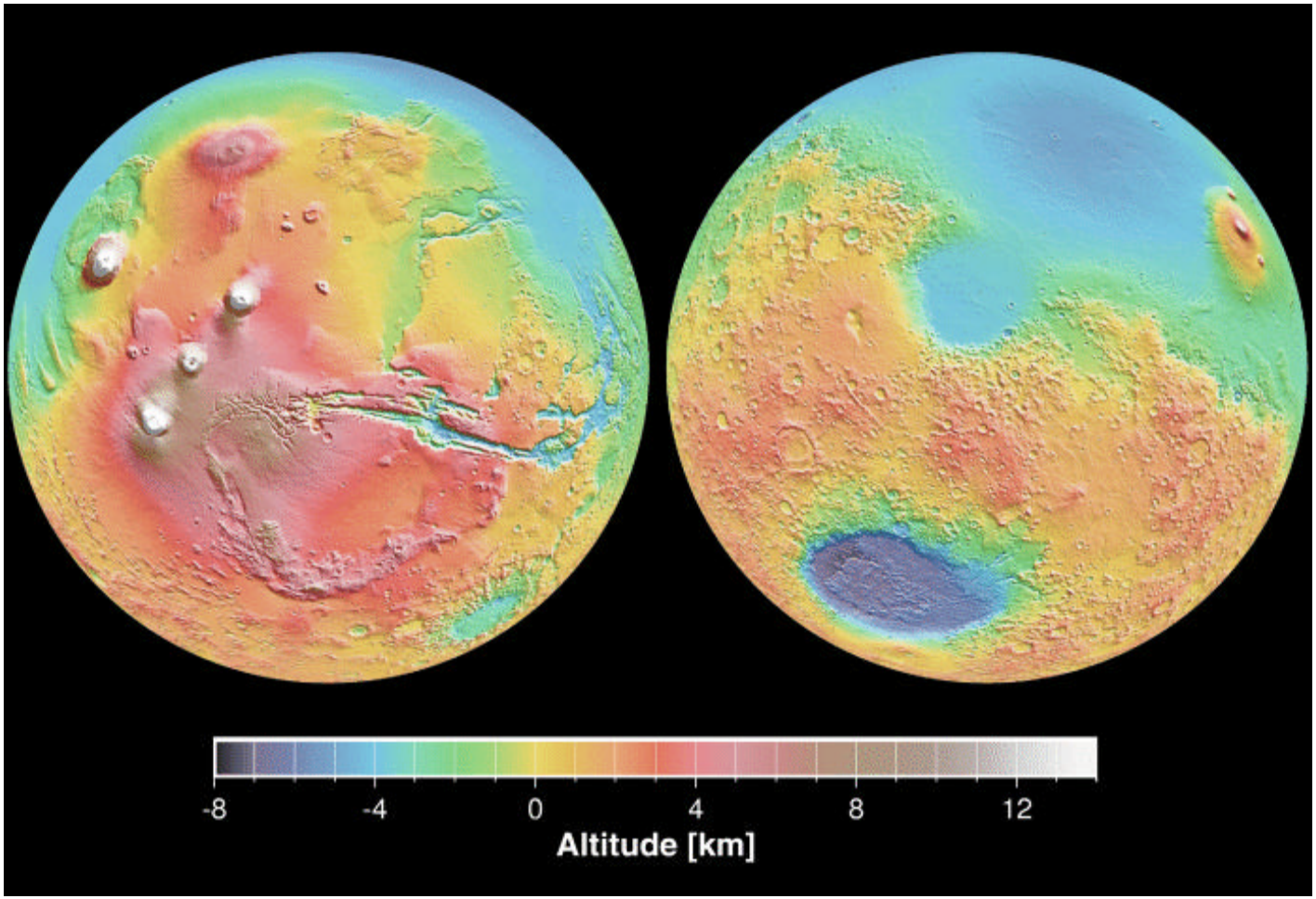

Mars Global Surveyor
EVIDENCE FOR RECENT WATER FLOW

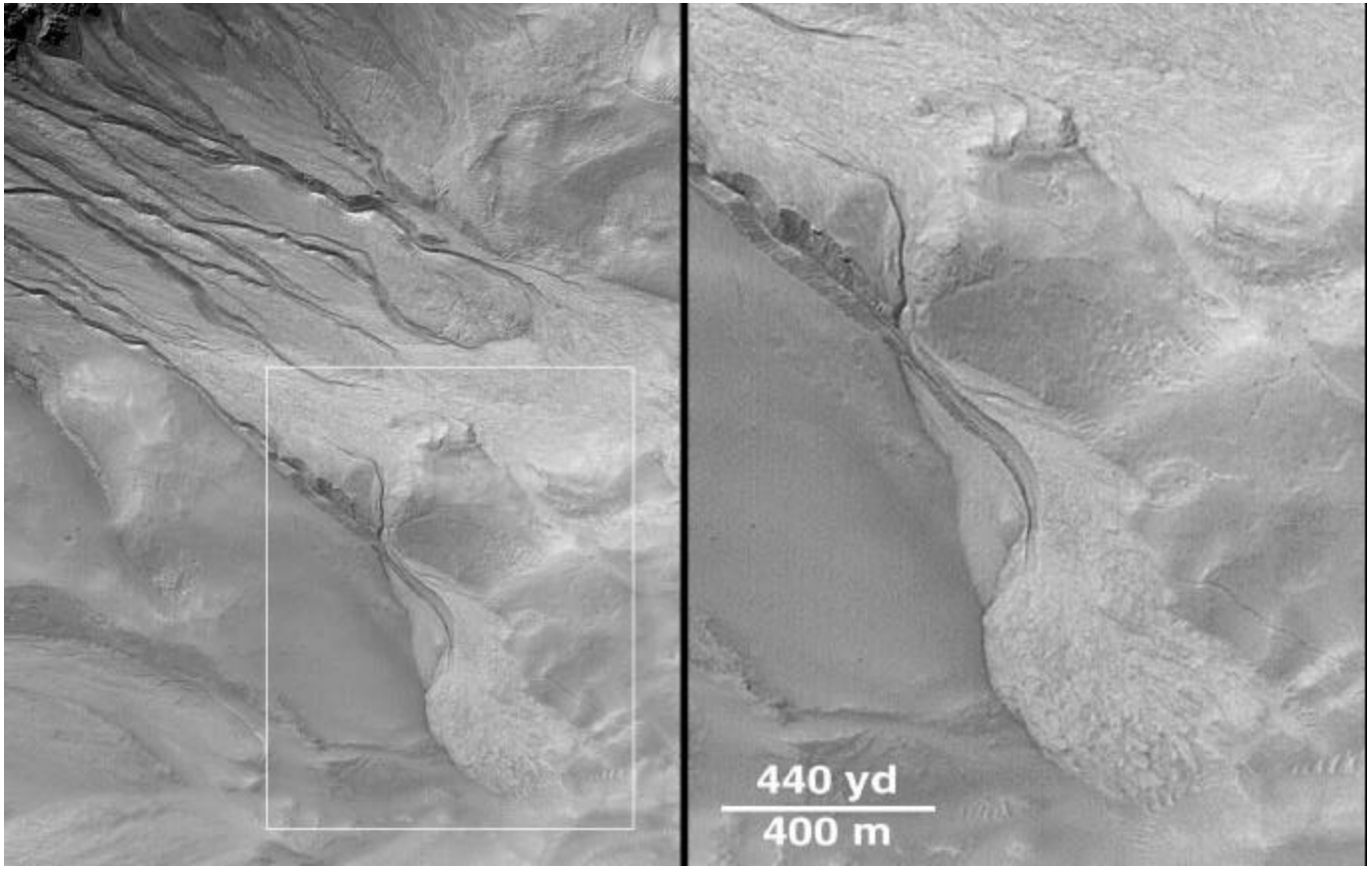

Mars Global Surveyor
Mission Summary

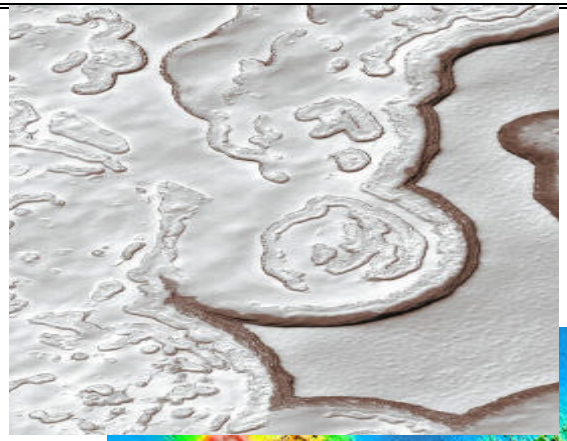

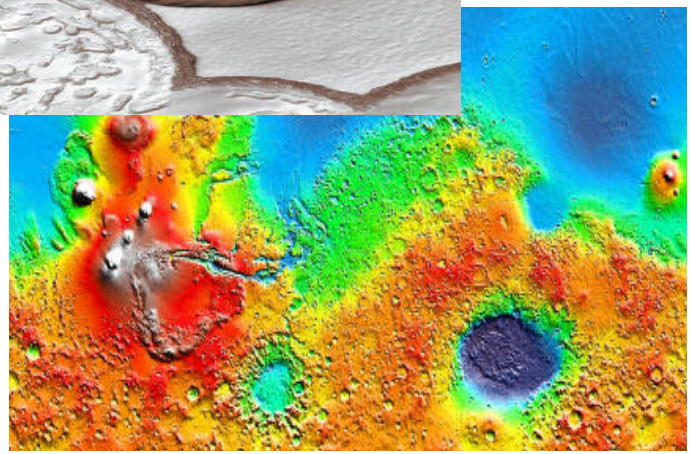

Science News ranks MGS 9th most productive NASA mission of past 28 years

Science Magazine breakthrough of the year 2001:Mars atmospheric pressure increase

125,000 th image taken

1000 days of mapping completed

Extended mission phase one ended April 22

MER landing site reconnaissance

Interannual seasonal comparisons

Odyssey aerobraking atmospheric monitoring

Extended mission phase two thru 2004

MER EDL Relay support

Interannual comparisons

MER Rover science relay

Mars Global Surveyor

Weekly MOC Synoptic Views-Apr. 1, 2002

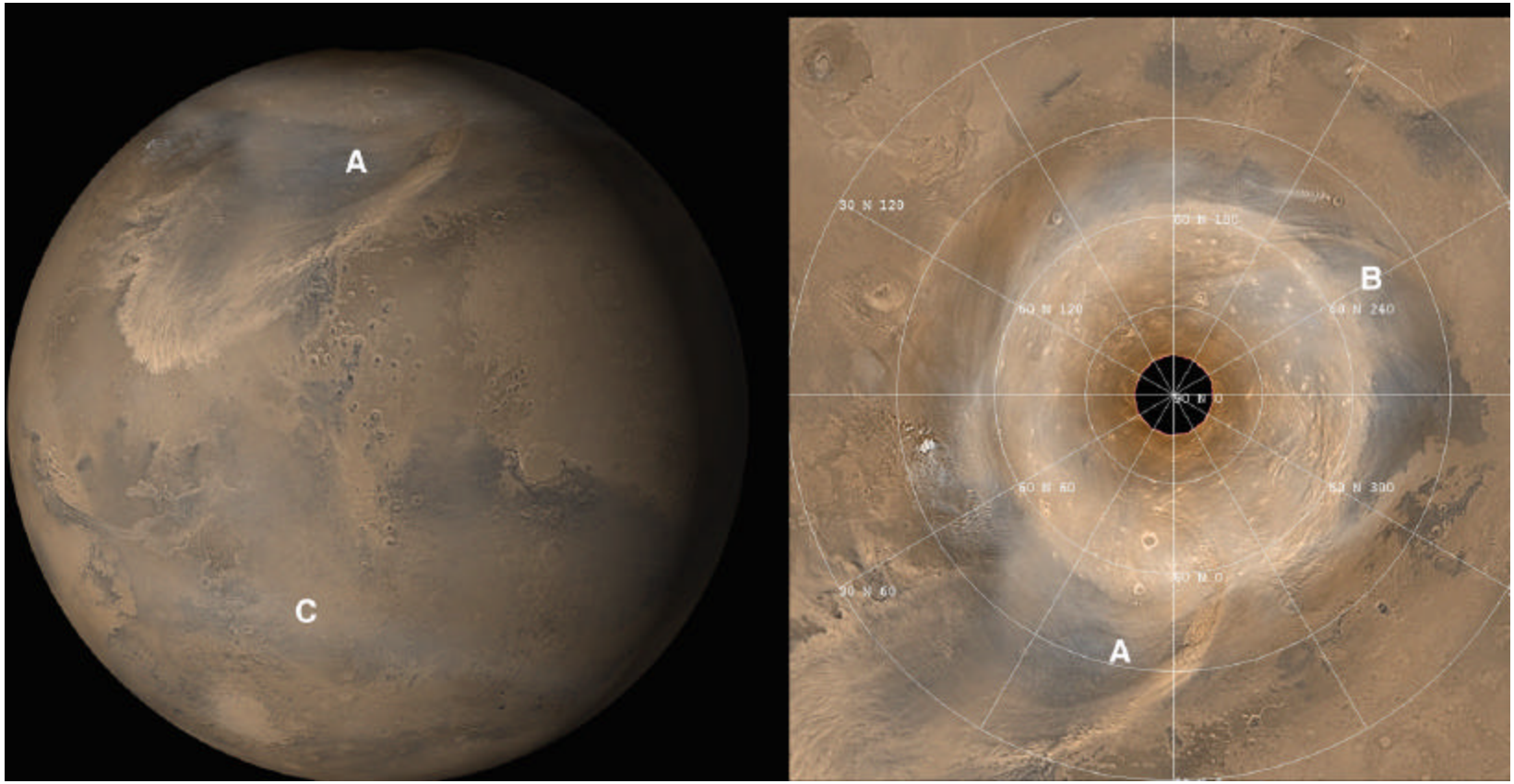

Mars Global Surveyor

MGS-MER GEOMETRY

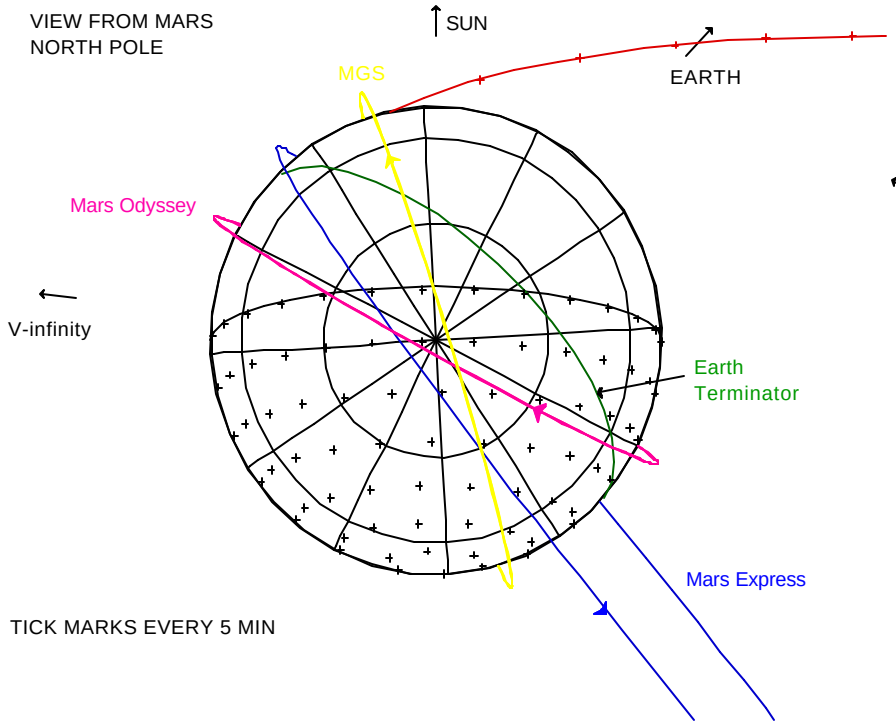

MER-A Open **Launch 5/30/03**
Arrival 1/4/04

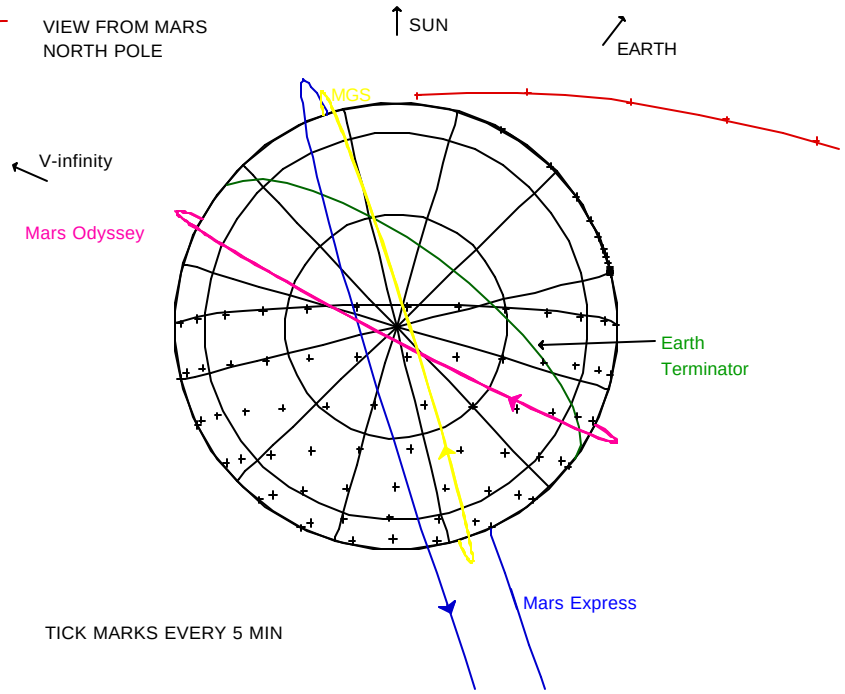

MER-B Open **Launch 6/27/03**
Arrival 2/8/04

Mars Global Surveyor
Spacecraft Anomaly History

DATE	ANOMALY	MITIGATION
11/7/96 (L 1d)	SA GIMBAL DAMPER ARM BROKE ON DEPLOYMENT; SAM YOKE CRACKED	EXTENDED LIGHTER A/B; PERIODIC MICROPHONIC TESTS
7/16/97 (MOI-60d)	NOISY GYRO	USING BACKUP UNIT
2/8/99 (MAP-30d)	TES CALIBRATION LAMP	USING BACKUP UNIT
3/15/99 (MAP 10d)	HGA AZIMUTH OBSTRUCTION	BETA SUPPLEMENT
1/18/01 (EOM-12d)	X-REACTION WHEEL	USING BACKUP SKEW UNIT
6/30/01 (E1 151d)	MOLA LASER	USING DETECTOR ONLY

Mars Global Surveyor
Fuel Analysis

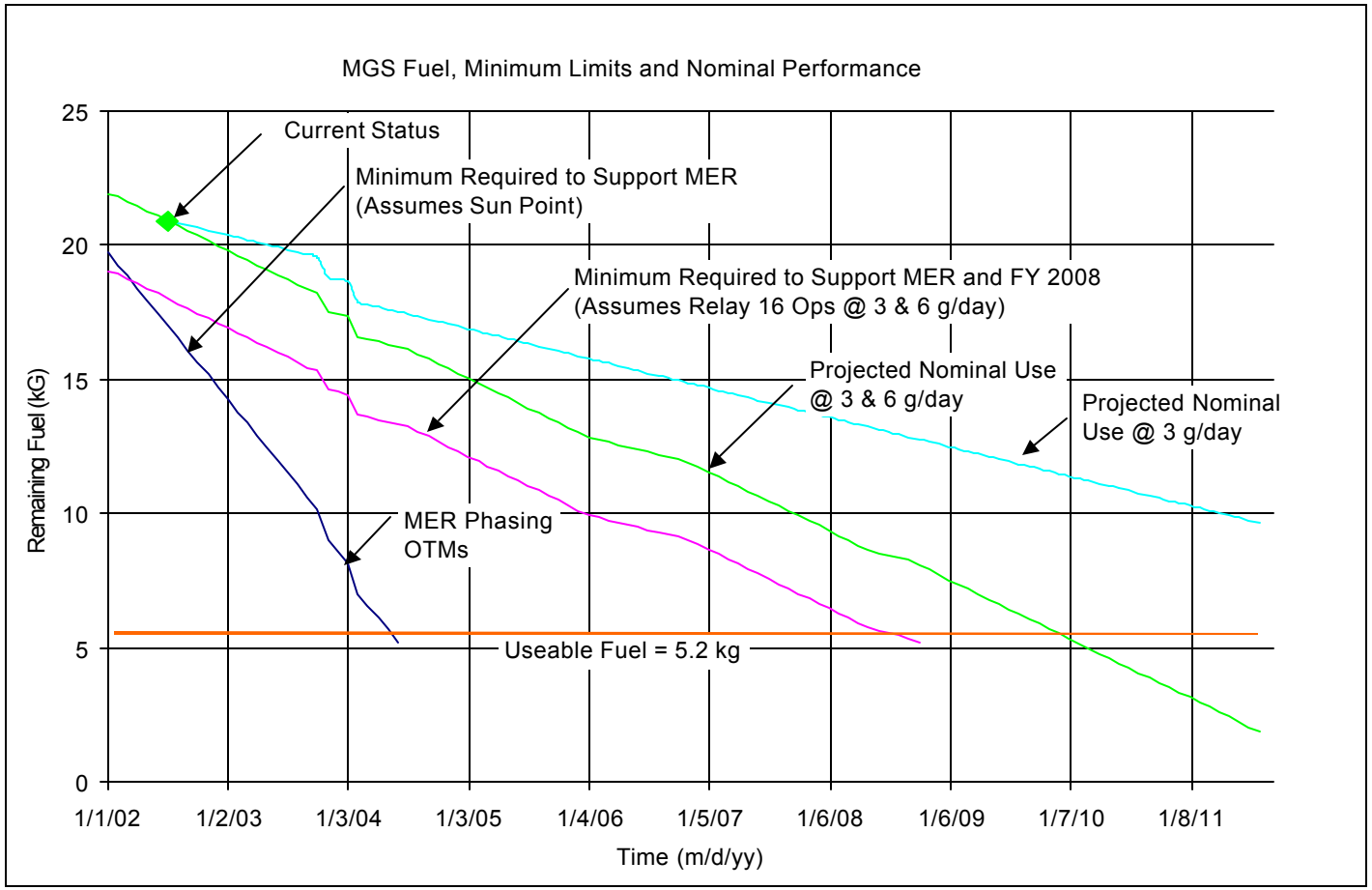

Mars Global Surveyor
Mission Assessment

- Spacecraft is in good health.
- Expect to fulfill extended mission objectives (complete MER site coverage is E2 mission objective).
- Expect to satisfy MER EDL and Rover relay Requirements.
- Chances of operation through 2008 are good.